Vertiv™ Liebert® GXT5 UPS

3,000 - 10,000 VA
208VAC

Intelligent and Efficient UPS for Protection of Your Mission-Critical Applications

Intelligent and Efficient UPS for Protection of Your Mission-Critical Applications

The Vertiv™ Liebert® GXT5 UPS is an online double conversion UPS solution which offers premium power outage protection and continuous power conditioning in a compact and flexible rack/tower form factor.

The Liebert® GXT5 single-phase UPS operates with high power efficiency, making it ideally suited to protect critical infrastructure in both centralized and edge network applications.

Scalable runtime options with matching external battery cabinets offer additional flexibility when extended uninterrupted power is required. Plus, the Liebert GXT5 provides battery health status and replacement date prediction for intelligent battery health management.

The UPS system is easy to deploy and maintain due to its user-friendly LCD interface and remote management capabilities supported by the Vertiv™ RDU101 communications card which makes the Liebert GXT5 compatible with Vertiv infrastructure management solutions such as LIFE™ Services, environmental sensors, Vertiv™ Power Insight, and more.

With high online efficiency and unity power factor operation, the Liebert GXT5 will meet your critical application needs. And you can rest assured that your business is protected with this Vertiv solution that includes a standard, three-year advanced exchange product warranty.

What's in the box

- UPS
- Pre-installed Vertiv RDU101 communications card (NIC) on 5,000-10,000 VA models
- Tower stand
- 4-Post Rack Mounting Kit
- USB Cable
- Quick Start Guide
- Safety Manual
- Factory Test Report
- Free Vertiv Power Insight management software (downloadable from Vertiv.com)

Liebert® GXT5 Features

Leading UPS Technology

- High output power factor (up to 1.0)
- Integrated Maintenance Bypass standard on all 5kVA and larger systems
- Full-color graphic LCD with gravity sensing orientation
- Automatic internal bypass
- External battery cabinets with auto-detection
- Output Distribution Options w/ interchangable POD's
- Battery health status and replacement date prediction
- Remote management, update, and configuration capabilities
- Optimized thermal management and variable speed fan

Efficient and Green Product

- High efficiency in online mode
- Energy Star 2.0 certified
- Even higher efficiency (up to 98%) in Active ECO mode
- Programmable outlets for power cycling hung equipment and optimum battery usage
- Compliance with Restriction of Hazardous Substances (RoHS) directive and the Registration, Evaluation, Authorization and Restriction of Chemicals (REACH) regulation

Solutions Wide

- 3 year warranty
- Compact Rack/Tower design
- Broad range of services and extended warranty
- Easy to install, configure and operate
- Vertiv RDU101 network communications card with advanced features
- Compatibility with environmental sensors
- Integrated dry-contacts with selectable definition
- Free Vertiv Power Insight management software
- Serial port for out-of-band management with Avocent® serial consoles

Vertiv™ Liebert® GXT5 Features

Unity Power Factor
More usable power enables more connected loads saving space and costs.

Energy Star 2.0 Certified
Efficiency up to 98% in ECO mode and up to 95% in online mode.

Compact rack/ tower design
Space-saving UPS provides rack space optimization and flexible installation.

Colored graphic LCD with gravity sensitive orientation
User-friendly interface provides insight to UPS status for easy installation, configuration and operation.

Integrated Battery
With self-test and detection capability

Battery Cabinets with auto-detection
Be confident the UPS is set up correctly to report available runtime when used with external battery cabinets.

Integrated Maintenance Bypass (5kVA to 10kVA models)
Enables UPS replacement without downtime.

Product warranty
Comprehensive coverage through a standard three-year advanced exchange warranty.

Family Overview

208V in / 208V out
Corded input

Note: Liebert® GXT5-3KL620RT2UXL model shown.

Model	Input	Output
GXT5-3KL620RT2UXL	L6-20P	(2) L6-15R and (2) L6-20R
GXT5-3KL630RT2UXL	L6-30P	(2) L6-15R and (2) L6-30R
GXT5-6KL630RT5UXLN	L6-30P Plug (on PD5-L630 POD)	(2) L6-20R and (2) L6-30R on 12-in. (300-mm) cords (on PD5-L630POD)

208V in / 208 and 120V out
4-wire system L-L-N-G

Model	Input	Output
GXT5-5000MVRT4UXLN	Hard-wired terminal block 3W + G (L-L-N-G)	Hard-wired 3W + G (L-L-N-G)
GXT5-6000MVRT4UXLN	Hard-wired terminal block 3W + G (L-L-N-G)	Hard-wired 3W + G (L-L-N-G)

208V in / 208V out
Hard-wired input, 3-wire system L-L-G

Note: Liebert® GXT5-5000HVRT5UXLN model shown.

Model	Input	Output
GXT5-5000HVRT5UXLN	Hard-wired terminal block 2W + G (L-L-G)	Hard-wired 2W + G (L-L-G) and (2) x L6-20R and (2) x L6-30R
GXT5-8000HVRT5UXLN	Hard-wired terminal block 2W + G (L-L-G)	Hard-wired 2W + G (L-L-G) and (2) x L6-20R and (2) x L6-30R
GXT5-10KHVRT5UXLN	Hard-wired terminal block 2W + G (L-L-G)	Hard-wired 2W + G (L-L-G) and (2) x L6-20R and (2) x L6-30R

208V in / 208 and 120V out
4-wire system L-L-N-G

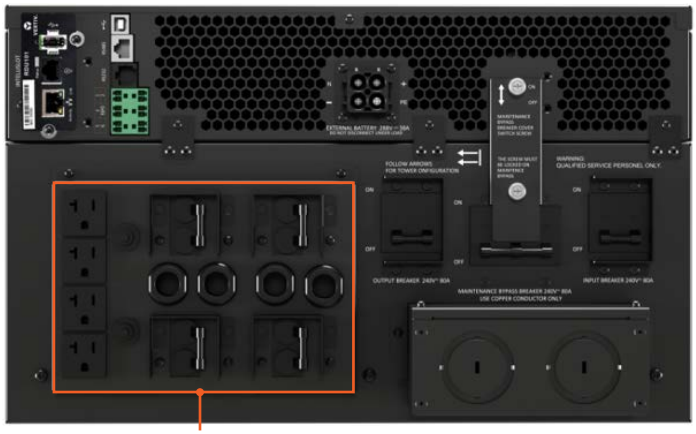

Note: *Optional POD shown, standard unit will ship with blanking panel. Optional POD's shown on pg 11.*

Model	Input	Output
GXT5-8000MVRT6UXLN	Hard-wired terminal block 3W + G (L-L-N-G)	Hard-wired 3W + G (L-L-N-G)
GXT5-10KMVRT6UXLN	Hard-wired terminal block 3W + G (L-L-N-G)	Hard-wired 3W + G (L-L-N-G)

Technical Specifications 208V in / 208 and 120V out

	Liebert® GXT5-5000MVRT4UXLN	Liebert® GXT5-6000MVRT4UXLN	Liebert® GXT5-8000MVRT6UXLN	Liebert® GXT5-10KMVRT6UXLN
Ratings (VA/W)	5,000 VA/5,000 W	6,000 VA/6,000 W	8,000 VA/8,000 W	10,000 VA/10,000 W
Dimensions, inches (mm)				
Unit W x D X H	16.9 x 25.6 x 6.8 (430 x 650 x 173)	16.9 x 25.6 x 6.8 (430 x 650 x 173)	16.9 x 25.6 x 10.2 (430 x 650 x 261)	16.9 x 25.6 x 10.2 (430 x 650 x 261)
Weight, pounds (kg)				
Unit	125.6 (57)	125.6 (57)	224.8 (102)	224.8 (102)
Input AC Parameters				
Operating Frequency, Nominal	40 - 70 Hz (Factory Default is 60 Hz)	40 - 70 Hz (Factory Default is 60 Hz)	40 - 70 Hz (Factory Default is 60 Hz)	40 - 70 Hz (Factory Default is 60 Hz)
Voltage Range	176 - 280 VAC	176 - 280 VAC	176 - 280 VAC	176 - 280 VAC
Input Wiring	Hard-wired terminal block 3W + G (L-L-N-G)	Hard-wired terminal block 3W + G (L-L-N-G)	Hard-wired terminal block 3W + G (L-L-N-G)	Hard-wired terminal block 3W + G (L-L-N-G)
Output AC Parameters				
Output Receptacles	Hard-wire, Optional POD's	Hard-wire, Optional POD's	Hard-wire, Optional POD's	Hard-wire, Optional POD's
User selectable output	208/120VAC	208/120VAC	208/120VAC	208/120VAC
Waveform (On Battery)	Sinewave	Sinewave	Sinewave	Sinewave
Utility (AC) Mode Overload	105% to 125% for 5 minutes 125% to 150% for 60 seconds >150% (impact load) minimum 200 ms	105% to 125% for 5 minutes 125% to 150% for 60 seconds >150% (impact load) minimum 200 ms	105% to 125% for 5 minutes 125% to 150% for 60 seconds >150% (impact load) minimum 200 ms	105% to 125% for 5 minutes 125% to 150% for 60 seconds >150% (impact load) minimum 200 ms
Battery				
Type	Valve-regulated, non-spillable, lead acid	Valve-regulated, non-spillable, lead acid	Valve-regulated, non-spillable, lead acid	Valve-regulated, non-spillable, lead acid
Backup Time (100% Load)	4.5 Minutes	3.5 Minutes	6.5 Minutes	4.5 Minutes
Backup Time (50% Load)	12.5 Minutes	9.5 Minutes	17 Minutes	12.5 Minutes
+1 External Battery Cabinet (100% Load)	12.5 Minutes	9.5 Minutes	17.5 Minutes	13 Minutes
+1 External Battery Cabinet (50% Load)	33 Minutes	25.5 Minutes	45 Minutes	33.5 Minutes
Environmental Requirements				
Operating Temperature, °F (°C)	+32 to +104 (0 to 40) (no derating)	+32 to +104 (0 to 40) (no derating)	+32 to +104 (0 to 40) (no derating)	+32 to +104 (0 to 40) (no derating)
Storage Temperature, °F (°C)	+5 to +104 (-15 to 40)	+5 to +104 (-15 to 40)	+5 to +104 (-15 to 40)	+5 to +104 (-15 to 40)
Relative Humidity	0% to 95%, non-condensing	0% to 95%, non-condensing	0% to 95%, non-condensing	0% to 95%, non-condensing
Operating Elevation	Up to 10,000 ft (3,000 m) at 77°F (25°C) without derating	Up to 10,000 ft (3,000 m) at 77°F (25°C) without derating	Up to 10,000 ft (3,000 m) at 77°F (25°C) without derating	Up to 10,000 ft (3,000 m) at 77°F (25°C) without derating
Audible Noise	<50 dBA,at 3.2 ft (1 m) from the front and sides, <55 dBA, at 3.2 ft (1 m) from rear	<50 dBA,at 3.2 ft (1 m) from the front and sides, <55 dBA, at 3.2 ft (1 m) from rear	<50 dBA,at 3.2 ft (1 m) from the front and sides, <55 dBA, at 3.2 ft (1 m) from rear	<50 dBA,at 3.2 ft (1 m) from the front and sides, <55 dBA, at 3.2 ft (1 m) from rear
Agency				
Surge Immunity	IEEE/ANSI C62.41 Category A & B	IEEE/ANSI C62.41 Category A & B	IEEE/ANSI C62.41 Category A & B	IEEE/ANSI C62.41 Category A & B
Transportation	ISTA Procedure 1E	ISTA Procedure 1E	ISTA Procedure 1E	ISTA Procedure 1E
Safety	UL1778, c-UL listed CSA 22.2 No 107.3	UL1778, c-UL listed CSA 22.2 No 107.3	UL1778, c-UL listed CSA 22.2 No 107.3	UL1778, c-UL listed CSA 22.2 No 107.3
Emissions	FCC Part 15 (Class A)	FCC Part 15 (Class A)	FCC Part 15 (Class A)	FCC Part 15 (Class A)
Warranty				
	Std. 3 year; Opt. 2 year extension	Std. 3 year; Opt. 2 year extension	Std. 3 year; Opt. 2 year extension	Std. 3 year; Opt. 2 year extension
Protection Plan				
Equipment Protection Plan	$500,000			

Technical Specifications 208V in / 208V out

	Liebert® GXT5-3KL620RT2UXL	Liebert® GXT5-3KL630RT2UXL	Liebert® GXT5-6KL630RT5UXLN	Liebert® GXT5-5000HVRT5UXLN	Liebert® GXT5-8000HVRT5UXLN	Liebert® GXT5-10KHVRT5UXLN
Ratings (VA/W)	3,000 VA/3,000 W	3,000 VA/3,000 W	4,900 VA/4,600 W	5,000 VA/5,000 W	8,000 VA/8,000 W	10,000 VA/10,000 W
Dimensions, inches (mm)						
Unit W x D X H	16.9 x 21.3 x 3.4 (430 x 540 x 85)	16.9 x 21.3 x 3.4 (430 x 540 x 85)	16.9 x 23.6 x 8.5 (430 x 600 x 217)	16.9×24.8×8.5 (430×630×217)	16.9×24.8×8.5 (430×630×217)	16.9×24.8×8.5 (430×630×217)
Weight, pounds (kg)						
Unit	65.1 (29.6)	65.1 (29.6)	149.1 (68)	156.7 (71.1)	164.2 (74.5)	166.4 (75.5)
Input AC Parameters						
Operating Frequency, Nominal	40 Hz ~ 70 Hz; Auto Sensing	40 Hz ~ 70 Hz; Auto Sensing	50 or 60 Hz (factory-default is 60 Hz)	50 or 60 Hz (factory-default is 50 Hz)	50 or 60 Hz (factory-default is 50 Hz)	50 or 60 Hz (factory-default is 50 Hz)
Voltage Range	208 VAC nominal; variable based on output load	208 VAC nominal; variable based on output load	175 - 280 VAC	176 – 288 VAC (100 – 176 VAC with power derating)	176 – 288 VAC (100 – 176 VAC with power derating)	176 – 288 VAC (100 – 176 VAC with power derating)
Input Power	L6-20P	L6-30P	L6-30P	Hard-wire terminals, L-L-G wiring	Hard-wire terminals, L-L-G wiring	Hard-wire terminals, L-L-G wiring
Output AC Parameters						
Output Receptacles	(2) L6-15R and (2) L6-20R	(2) L6-15R and (2) L6-30R	(2) L6-20R and (2) L6-30R on 12-in. (300-mm) cords (on PD5-L630POD)	(2) L6-20R, (2) L6-30R, hard-wire terminals	(2) L6-20R, (2) L6-30R, hard-wire terminals	(2) L6-20R, (2) L6-30R, hard-wire terminals
Output Voltage	208 VAC Nominal (Adjustable to 200/220/230/240 VAC)	208 VAC Nominal (Adjustable to 200/220/230/240 VAC)	208 VAC Nominal (Adjustable to 200/220/230/240 VAC)	208 VAC Nominal (Adjustable to 200/220/230/240 VAC)	208 VAC Nominal (Adjustable to 200/220/230/240 VAC)	208 VAC Nominal (Adjustable to 200/220/230/240 VAC)
Waveform (on battery)	Sinewave	Sinewave	Sinewave	Sinewave	Sinewave	Sinewave
Utility (AC) Mode Overload	>200% for 250ms; 150-200% for 2 seconds; 125-150% for 10 seconds; 105-125% for 15 seconds	>200% for 250ms; 150-200% for 2 seconds; 125-150% for 10 seconds; 105-125% for 15 seconds	105% to 125% for 5 minutes 125% to 150% for 60 seconds >150% (impact load) minimum 200 ms	> 150% minimum 200 mS, 125 – 150% for 60 seconds; 105 – 125% for for 5 minutes; ≤ 105% continuous	> 150% minimum 200 mS, 125 – 150% for 60 seconds; 105 – 125% for for 5 minutes; ≤ 105% continuous	> 150% minimum 200 mS, 125 – 150% for 60 seconds; 105 – 125% for for 5 minutes; ≤ 105% continuous
Battery						
Type	Valve-regulated, non-spillable, lead acid	Valve-regulated, non-spillable, lead acid	Valve-regulated, non-spillable, lead acid	Valve-regulated, non-spillable, lead acid	Valve-regulated, non-spillable, lead acid	Valve-regulated, non-spillable, lead acid
Backup Time (100% Load)	3 Minutes	3 Minutes	3.5 Minutes	7.0 Minutes	3.5 Minutes	2 Minutes
Backup Time (50% Load)	9 Minutes	9 Minutes	9.5 Minutes	18.5 Minutes	9.5 Minutes	7 Minutes
+1 External Battery Cabinet (100% Load)	17 Minutes	17 Minutes	9.5 Minutes	19.0 Minutes	9.5 Minutes	7 Minutes
+1 External Battery Cabinet (50% Load)	43.5 Minutes	43.5 Minutes	25.5 Minutes	48.0 Minutes	26 Minutes	19 Minutes
Environmental Requirements						
Operating Temperature, °F (°C)	+32 to +104 (0 to 40) (no derating)	+32 to +104 (0 to 40) (no derating)	+32 to +104 (0 to 40) (no derating)	+32 to +104 (0 to 40) (no derating)	+32 to +104 (0 to 40) (no derating)	+32 to +104 (0 to 40) (no derating)
Storage Temperature, °F (°C)	-4 to +140 (-2 to 60)	-4 to +140 (-2 to 60)	+5 to +104 (-15 to 40)	+5 to +104 (-15 to 40)	+5 to +104 (-15 to 40)	+5 to +104 (-15 to 40)
Relative Humidity	0% to 95%, non-condensing	0% to 95%, non-condensing	0% to 95%, non-c ondensing	0% to 95%, non-condensing	0% to 95%, non-condensing	0% to 95%, non-condensing
Operating Elevation	Up to 10,000 ft (3,000 m) at 77°F (25°C) without derating	Up to 10,000 ft (3,000 m) at 77°F (25°C) without derating	Up to 10,000 ft (3,000 m) at 77°F (25°C) without derating	Up to 10,000 ft (3,000 m) at 77°F (25°C) without derating	Up to 10,000 ft (3,000 m) at 77°F (25°C) without derating	Up to 10,000 ft (3,000 m) at 77°F (25°C) without derating
Audible Noise	<48 dBA,at 3.2 ft (1 m) from the front and sides, <48 dBA, at 3.2 ft (1 m) from rear	<48 dBA,at 3.2 ft (1 m) from the front and sides, <48 dBA, at 3.2 ft (1 m) from rear	<50 dBA,at 3.2 ft (1 m) from the front and sides, <55 dBA, at 3.2 ft (1 m) from rear	<55 dBA,at 1 meter from the front, <50 dBA, at 1 meter from rear or sides	<55 dBA,at 1 meter from the front, <50 dBA, at 1 meter from rear or sides	<55 dBA,at 1 meter from the front, <50 dBA, at 1 meter from rear or sides
Agency						
Surge Immunity	IEEE/ANSI C62.41 Category A & B	IEEE/ANSI C62.41 Category A & B	IEEE/ANSI C62.41 Category A & B	IEEE/ANSI C62.41 Category A & B	IEEE/ANSI C62.41 Category A & B	IEEE/ANSI C62.41 Category A & B
Transportation	ISTA Procedure 1A	ISTA Procedure 1A	ISTA Procedure 1E	ISTA Procedure 1E	ISTA Procedure 1E	ISTA Procedure 1E
Safety	UL1778, c-UL listed CSA 22.2 No 107.3	UL1778, c-UL listed CSA 22.2 No 107.3	UL1778, c-UL listed CSA 22.2 No 107.3	UL1778, c-UL listed CSA 22.2 No 107.3	UL1778, c-UL listed CSA 22.2 No 107.3	UL1778, c-UL listed CSA 22.2 No 107.3
Emissions	FCC Part 15 (Class A)	FCC Part 15 (Class A)	FCC Part 15 (Class A)	FCC Part 15 (Class A)	FCC Part 15 (Class A)	FCC Part 15 (Class A)
Warranty						
	Std. 3 year; Opt. 2 year extension	Std. 3 year; Opt. 2 year extension	Std. 3 year; Opt. 2 year extension	Std. 3 year; Opt. 2 year extension	Std. 3 year; Opt. 2 year extension	Std. 3 year; Opt. 2 year extension
Protection Plan						
Equipment Protection Plan	$500,000					

Power Assurance Package: Comprehensive Service Support for Critical Systems

- **Five-year protection plan** with 100% parts coverage and 24x7 emergency service
- **On-site installation and startup** of UPS and internal batteries (excludes hard-wired applications); configuration of new UPS and accessories; and if purchased, safe removal and disposal of legacy UPS and batteries
- **On-site service support** available 24x7 (within 150 miles of regional service center) and includes 100% labor and travel coverage
- **100% parts coverage** for UPS and includes internal batteries, POD (power output distribution), and web card
- **24x7 access** to customer resolution center and online access to Customer Services Network

Key benefits:

- Hassle-free management of multi-site rollouts
- Frees up time-strapped IT staff by managing and tracking UPS health, maintenance and service
- Reduces the worry of critical equipment downtime
- Ensures rapid recovery in the event of failure (within 24-48 hours)
- Frees you from the responsibility of handling and documenting the disposal of legacy UPS and batteries

Remote Diagnostic Services for Rapid Response

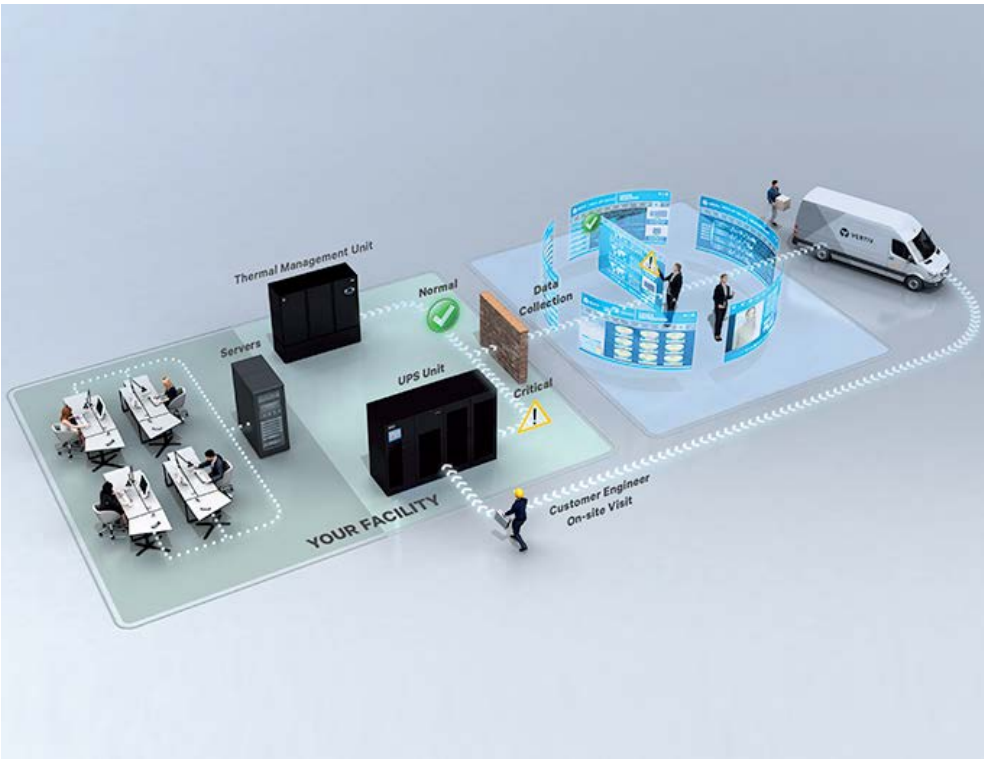

Uptime assurance

- Continuous monitoring for early detection of trends and operating anomalies
- Analysis and interpretation of alarm and status messages

Rapid incident response

- Automatic transmission of data for analysis
- Concurrent diagnosis and dispatch of engineer to site
- Shipment of parts for corrective maintenance

Increased insight and ease of management

- Notification of operating conditions that may impact system health
- Periodic trend and analysis reports
- Integration of remote and on-site services to ensure business continuity

Liebert® GXT5 UPS - Power Assurance Services

Power Assurance Package

Bundled Start-up Service AND 5-Year On-site Emergency Response	Standard	With LIFE™ Services	With Removal	With LIFE™ and Removal
Equipment Model / Type	Part Number	Part Number	Part Number	Part Number
Liebert® GXT5 UP TO 3 KVA	PAPGXT-1K3K	PAPGXT-1K3KLF	PAPGXT-1K3KRMV	PAPGXT-1K3KRLF
Liebert® GXT5 5.0 to 6.0 kVA	PAPGXT-5K6K	PAPGXT-5K6KLF	PAPGXT-5K6KRMV	PAPGXT-5K6KRLF
Liebert® GXT5 8.0 to 10.0 kVA	PAPGXT-8-10K	PAPGXT-8-10KLF	PAPGXT-8-10KRMV	PAPGXT-8-10KRLF
External Battery Cabinet (144V or 288V)	PAPGXT-BATT	N/A	PAPGXT-BATTRMV	N/A

Power Startup Services

Startup Service Only	Standard	With Removal
Equipment Model / Type	Part Number	Part Number
Liebert GXT5 UP TO 3 KVA	SUGXT-1K3K	SUGXT-1K3KRMV
Liebert GXT5 5.0 to 6.0 kVA	SUGXT-5-6U7	SUGXT-5-6U7RMV
Liebert GXT5 8.0 to 10.0 kVA	SUGXT-8-10U7	SUGXT-8-10U7RMV
External Battery Cabinet (144V or 288V)	SUGXT-EXTBTCB	SUGXT-EXTBTCBRMV

Power Emergency Services

5-Year On-site Emergency Coverage - Only	Standard	With LIFE Services
Equipment Model / Type	Part Number	Part Number
Liebert® GXT5 3.0 kVA	PEPGXT-30005YR	PEPGXT-3000LF
Liebert GXT5 5.0 to 6.0 kVA	PEPGXT-5K6K5YR	PEPGXT-5K6KLF
Liebert GXT5 8.0 to 10.0 kVA	PEPGXT-8-10K5YR	PEPGXT-8K10KLF
External Battery Cabinet 144V	PEPGXT-144BAT5YR	N/A
External Battery Cabinet 288V	PEPGXT-288BAT5YR	N/A

Power Assurance Package - Summary

- Includes all below "Power Start-up Services" and "Power Emergency Services" support
- One Preventative Maintenance visit after 3rd year (5-10kVA UPS only)

Power Startup Services - Summary

- Installation includes mounting and start-up of new UPS or EBC (excludes hard-wired applications)
- Services performed by Vertiv factory trained technician
- Services performed 7 X 24, excluding national holidays within the 48 contiguous states and Hawaii
- Removal and disposal of existing UPS or EBC equipment, if selected

Power Emergency Services - Summary

- On Site Service Support
- Full-service five (5) year contract term commencing upon the start-up date
- 100% parts coverage, including internal batteries, POD and web card
- 100% labor and travel coverage 7 days/week, 24 hours/day
- 24-Hour Customer Resolution Center via 1-800-LIEBERT
- Access to Customer Services Network portal

LIFE™ Services includes above plus:

- Continuous Monitoring, Expert Analysis, and Proactive Response

Note: LIFE Services requires an RDU101 card, which is included on all 5000VA to 10000VA models.

Please refer to the Scopes of Work for full and additional details

Liebert® GXT5 Extended Warranty (3000 - 10000 VA; 208VAC)

UPS Model Number	Additional 2 Years / Warranty Part Number
GXT5-3KL620RT2UXL	2WEGXT-3KL620
GXT5-3KL630RT2UXL	2WEGXT-3KL630
GXT5-5000MVRT4UXLN	2WEGXT-5KMV
GXT5-5000HVRT5UXLN	2WEGXT-5KHV
GXT5-6000MVRT4UXLN	2WEGXT-6KMV
GXT5-6KL630RT5UXLN	2WEGXT-6KL630
GXT5-8000MVRT6UXLN	2WEGXT-8KMV
GXT5-8000HVRT5UXLN	2WEGXT-8KHV
GXT5-10KMVRT6UXLN	2WEGXT-10KMV
GXT5-10KHVRT5UXLN	2WEGXT-10KHV

Available Accessories for the Vertiv™ Liebert® GXT5 UPS

External battery cabinets and replacement battery kits

UPS	External battery cabinets	Replacement battery kits
GXT5-3KL620RT2UXL	GXT5-EBC72VRT2U	GXT5-72VBATKIT
GXT5-3KL630RT2UXL	GXT5-EBC72VRT2U	GXT5-72VBATKIT
GXT5-5000MVRT4UXLN	GXT5-EBC144VRT2U	GXT5-144VBATKIT
GXT5-5000HVRT5UXLN	GXT5-EBC192VRT3U	GXT5-192VBATKIT
GXT5-6000MVRT4UXLN	GXT5-EBC144VRT2U	GXT5-144VBATKIT
GXT5-6KL630RT5UXLN	GXT5-EBC192VRT3U	GXT5-192VBATKIT
GXT5-8000MVRT6UXLN	GXT5-EBC288VRT4U	GXT5-288VBATKIT
GXT5-8000HVRT5UXLN	GXT5-EBC192VRT3U	GXT5-192VBATKIT
GXT5-10KMVRT6UXLN	GXT5-EBC288VRT4U	GXT5-288VBATKIT
GXT5-10KHVRT5UXLN	GXT5-EBC192VRT3U	GXT5-192VBATKIT

The batteries in the External Battery Cabinets used with the 5-10kVA UPSs are user-replaceable. To replace them, order the replacement battery kit shown in the 3rd column. For the External Battery Cabinets used with the 3kVA UPS models, order a new External Battery Cabinet (2nd column).

External Battery Cabinet Cables*

External Battery Cabinet Supported	Part Number (6' Cable)
GXT5-EBC72VRT2U	4114282
GXT5-EBC144VRT2U	4114284
GXT5-EBC288VRT4U	25060660
GXT5-EBC192VRT3U	25060591

**1' cable is bundled and comes standard with every External Battery Cabinet. The 6' cables in this table are optional*

Network communications and environmental sensors

Network Communications	RDU101	Intellislot web card for SNMP and web management. Supports environmental sensors. The RDU101 comes factory installed on 5kVA and larger GXT5 UPS.
	IS-RELAY	Intellislot Interface kit for relay contacts
Environmental Sensors	SN-Z01	Integrated cable with single temperature sensor
	SN-Z02	Integrated cable with three temperature sensors
	SN-Z03	Integrated cable with three temperature and one humidity sensors
	SN-T	Modular with single temperature sensor
	SN-TH	Modular with single temperature and single humidity sensor
	SN-2D	Modular with two door contact inputs
	SN-3C	Modular with three dry contact inputs
	SN-L20	Modular leak zone sensor with 20 foot cable (Liebert RDU-S only)
UPS manageability options	Vertiv™ Power Insight Software Management	Vertiv Power Insight is a complimentary web-based software designed to monitor up to 100 Vertiv™ UPSs and rPDUs

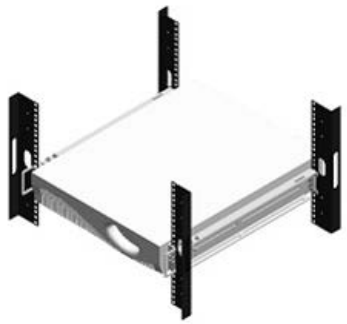

Standard Kit included inside the UPS box 201193G1L

2POSTRMKIT for 2U GXT5 (500 - 3000VA)

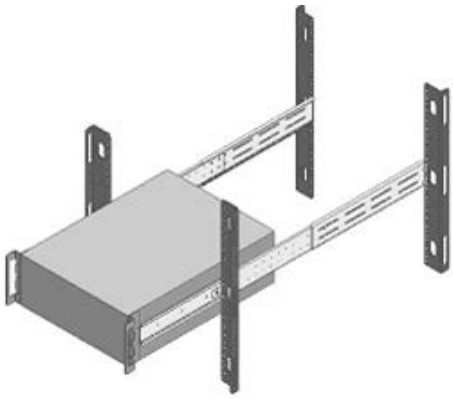

Rack Slide Kits for all Liebert® GXT5 Rack Tower Models (RMKIT 18-32)

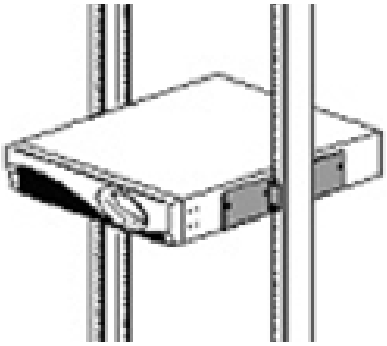

2UTELECOMRKIT for 2U GXT5 (500 - 3000VA)

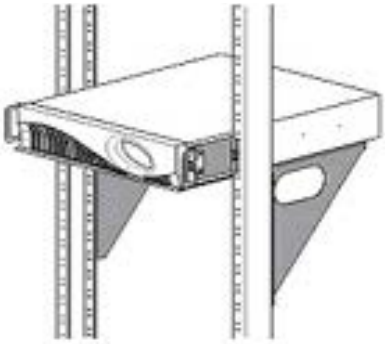

Rack Shelves for 2U GXT5 (500VA – 3000VA)

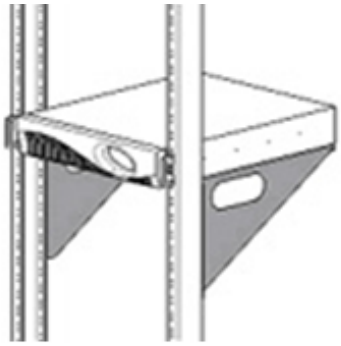

Flush Mounting (RS500 and RS700)

Mounting Kit Options

Application	Model Supported	Style	Model	Description
2 Post- Telecom rack	Entire Liebert® GXT5 UPS family (500VA to 10kVA)	Shelf	RS500	Flush-mount shelf for 19" rack wide
		Shelf	RS600	Center-mount shelf for 19" rack wide
		Shelf	RS700	Flush-mount shelf for 23" rack wide
		Shelf	RS800	Center-mount shelf for 23" rack wide
	Liebert GXT5 Only up to 3kVA	Bracket	2UTELECOMRKIT	Only center-mount bracket for 19" rack wide
		Bracket	2POSTRMKIT	Front flush / center-mount bracket - 4-piece design
	5/6kVA and 8/10 kVA (MV & HV models)	Bracket	4UTELECOMRKIT	Only center-mount bracket for 19" rack wide
Wall Mount	Liebert® GXT5 up to 3kVA	Bracket	WMBKT2U	Wall mount bracket holds (1) GXT5 2U or (1) PSI5 2U product, steel painted black
		Bracket	WMBKT2USS	Wall mount bracket holds (1) GXT5 2U or (1) PSI5 2U product, stainless steel
4 Post rack	Entire Liebert GXT5 UPS family (500VA to 10kVA)	Bracket	RMKIT18-32	Cabinet/racks with 18" - 32" deep support rails - Telescopic rail

Note: RS600 and RS800 kits include adapter brackets for installation of up to (2) Liebert® GXT5 2U model

Power Output Distribution, MicroPOD and Transformer Distribution Units

Maintenance Bypass and Output Distribution - Liebert® GXT5 UPS

POD Model Number	Input Connection	Output Connection	UPS
GXT5-03KPOD01	-	-	GXT5-3KL630RT2UXL
PD5-001	L14-30P	1 x L14-30R, 1 x L6-30R, 4 x 5-15/20R T Slot	5-6kVA, MV
PD5-002	L14-30P	2 x L6-20R, 2 x 5-15/20R T Slot	5-6kVA, MV
PD5-003	L14-30P	2 x L6-30R, 4 x 5-15/20R T Slot	5-6kVA, MV
PD5-004	L14-30P	4 x L5-20R, 2 x L5-30R	5-6kVA, MV
PD5-005	L14-30P	4 x L5-20R, 2 x L6-30R	5-6kVA, MV
PD5-006	L14-30P	4 x L6-20R	5-6kVA, MV
PD5-201	Hardwired	2 x C19, 6 x C13	5-6kVA, HV
PD5-202	Hardwired	2 x C19, 4 x C13	8-10kVA, HV

Power Output Distribution for models Liebert® GXT5-8000MVRT6UXLN, Liebert® GXT5-10KMVRT6UXLN

POD Model Number	Input Connection	Output Connections
PD2-101	N/A	(8) 5-15/20R T-slot, (2) L6-30R
PD2-102	N/A	(4) 5-15/20R T-slot, (4) L6-20R
PD2-103	N/A	(4) 5-15/20R T-slot, (4) L6-30R
PD2-104	N/A	(4) 5-15/20R T-slot, (2) L6-30R, (2) L6-20R
PD2-105	N/A	(4) 5-15/20R T-slot, (2) L5-30R, (2) L5-20R
PD2-106	N/A	(4) L5-20R, (4) L6-20R
PD2-107	N/A	(4) L5-20R, (4) 5-15/20R T-slot
PD2-108	N/A	(2) L6-30R, (2) L6-20R
PD2-109	N/A	(2) L14-30R
PD2-200[1]	N/A	(4) IEC320-C19, (4) IEC320-C13
PD2-201[1]	N/A	(2) IEC320-C19, (8) IEC320-C13
PD2-202[1]	N/A	(12) IEC320-C13
PD2-204[1]	N/A	(2) IEC309-32A, (4) IEC320-C13

[1] These IEC output sockets will have 200-240 volts.

MicroPOD - Maintenance Bypass and Output Distribution

The Liebert® MicroPOD (Power Output Distribution) is a maintenance bypass option for UPS products, 3 kVA and below. It allows removal of the UPS without powering down the connected equipment. The POD's can be installed on the floor or mounted to a Liebert GXT5 UPS using the included mounting brackets.

UPS Model	POD model number	Plug to Utility	Output Receptacles
GXT5-3KL620RT2UXL	MP2-220N	L6-20P or Hard-wired with removable plug	L6-20R, (2) L6-15R, (2) L6-20R or Hard-wired with removable receptacle plates.

Step-Down Transformer Distribution Units

- 2U Rack/Tower
- Compatible with GXT4, GXT5, PSI5 208V UPS
- 208-240VAC Input, 120VAC output
- Manually configurable output voltage (100-125VAC)

UPS Model	TDU Model	VA / W	TDU Input	Output
GXT5-3KL620RT2UXL	TDU-3500RTL620	3,440 VA / 3,440 W	L6-20P	(8) 5-15/20R, (2) L5-20R
GXT5-3KL630RT2UXL GXT5-6KL630RT5UXLN*	TDU-4000RTL630	4,000 VA / 4,000 W	L6-30P	(8) 5-15/20R, (2) L5-20R
GXT5-6KL630RT5UXLN, GXT5-5000HVRT5UXLN, GXT5-8000HVRT5UXLN, GXT5-10KHVRT5UXLN	TDU-6000RTL630	5,050 VA / 5,050 W	L6-30P	(8) 5-15/20R, (2) L5-30R

**Compatibility depends on downstream power requirement of equipment connected to the TDU.*

Vertiv.com | **Vertiv Headquarters,** 1050 Dearborn Drive, Columbus, OH, 43085, USA

© 2022 Vertiv Group Corp. All rights reserved. Vertiv™ and the Vertiv logo are trademarks or registered trademarks of Vertiv Group Corp. All other names and logos referred to are trade names, trademarks or registered trademarks of their respective owners. While every precaution has been taken to ensure accuracy and completeness here, Vertiv Group Corp. assumes no responsibility, and disclaims all liability, for damages resulting from use of this information or for any errors or omissions. Specifications, rebates and other promotional offers are subject to change at Vertiv's sole discretion upon notice.

SL-70505 (R05/22)