# Power Xpert™ 9395 UPS
# 225–275 kVA
# Installation and Operation Manual

Powering Business Worldwide

# Power Xpert™ 9395 UPS
# 225–275 kVA
# Installation and Operation Manual

Powering Business Worldwide

# IMPORTANT SAFETY INSTRUCTIONS
# SAVE THESE INSTRUCTIONS

This manual contains important instructions that you should follow during installation and maintenance of the UPS and batteries. Please read all instructions before operating the equipment and save this manual for future reference.

# CONSIGNES DE SÉCURITÉ IMPORTANTES
# CONSERVER CES INSTRUCTIONS

Ce manuel comporte des instructions importantes que vous êtes invité à suivre lors de toute procédure d'installation et de maintenance des batteries et de l'onduleur. Veuillez consulter entièrement ces instructions avant de faire fonctionner l'équipement et conserver ce manuel afin de pouvoir vous y reporter ultérieurement.

**WARNING**

This is a product for restricted sales distribution to informed partners (EN/IEC 62040-2). Installation restrictions or additional measures may be needed to prevent electromagnetic disturbances.

Eaton, Powerware, Power Xpert, Powerware Hot Sync, and X-Slot are registered trademarks of Eaton Corporation or its subsidiaries and affiliates. Modbus is a registered trademark of Schneider Automation. National Electrical Code and NEC are registered trademarks of National Fire Protection Association, Inc. All other trademarks are property of their respective companies.

©Copyright 2007-2013 Eaton Corporation, Raleigh, NC, USA. All rights reserved. No part of this document may be reproduced in any way without the express written approval of Eaton Corporation.

# Table of Contents


**1 Introduction . . . . . -1**

1.1 UPS Standard Features . . . . . -1
1.1.1 Installation Features . . . . . -1
1.1.2 Control Panel . . . . . -2
1.1.3 Customer Interface . . . . . -3
1.1.4 Advanced Battery Management . . . . . -4
1.1.5 Power Management Software . . . . . -4
1.2 Options and Accessories . . . . . -4
1.2.1 Integrated Battery Cabinets . . . . . -4
1.2.2 Field Installed UPM . . . . . -4
1.2.3 Maintenance Bypass Module . . . . . -4
1.2.4 Sync Control . . . . . -4
1.2.5 Single-Feed Kit . . . . . -4
1.2.6 Separate Rectifier Input . . . . . -5
1.2.7 Distributed Bypass System . . . . . -5
1.2.8 Input Output Module Configuration . . . . . -5
1.2.8 Continuous Static Switch . . . . . -5
1.2.8 Inherent Redundancy . . . . . -6
1.2.9 Energy Saver System and High Alert Modes . . . . . -6
1.2.11 Harmonic Reduction System (HRS) . . . . . -6
1.2.10 Variable Module Management System and High Alert Modes . . . . . -7
1.2.12 Monitoring and Communication . . . . . -7
1.3 Battery System . . . . . -8
1.5 Using This Manual . . . . . -8
1.6 Conventions Used in This Manual . . . . . -8
1.7 Symbols, Controls, and Indicators . . . . . -9
1.8 For More Information . . . . . -9
1.9 Getting Help . . . . . -10

**2 Safety Warnings . . . . . 2-1**


## Section I – Installation


**3 UPS Installation Plan and Unpacking . . . . . 3-1**

3.1 Creating an Installation Plan . . . . . 3-1
3.2 Preparing the Site . . . . . 3-1
3.2.1 Environmental Considerations . . . . . 3-1
3.2.2 Installation Considerations . . . . . 3-2
3.2.3 UPS System Power Wiring Preparation . . . . . 3-7
3.2.4 UPS System Interface Wiring Preparation . . . . . 3-17
3.2.5 Distributed Bypass Power Wiring Preparation . . . . . 3-18
3.3 Inspecting and Unpacking the UPS Cabinet . . . . . 3-20

**4 UPS System Installation . . . . . 4-1**

4.1 Preliminary Installation Information . . . . . 4-1
4.2 Unloading the UPS Cabinet from the Pallet and Mechanical Installation . . . . . 4-1
4.3 Field Installed UPM Installation . . . . . 4-5

4.4 Battery System Installation . . . 4-5
4.5 Distributed Bypass Tie Cabinet Installation . . . 4-5
4.6 Installing UPS External and Battery Power Wiring . . . 4-5
4.6.1 2-Hole Barrel Lug Terminations to Bus Bar Installation . . . 4-6
4.6.2 External Power Wiring Installation . . . 4-7
4.6.3 Battery Power Wiring . . . 4-13
4.7 Installing Interface Connections . . . 4-15
4.7.1 TB1, TB2, and TB3 Connections (Other than TB1 Battery Interface Connections) . . . 4-15
4.7.2 TB1 Battery Interface Connections . . . 4-21
4.7.3 X-Slot Connections . . . 4-23
4.8 Installing a REPO Switch . . . 4-24
4.9 Installing Options, Accessories, and Distributed Bypass Control Wiring . . . 4-28
4.10 Initial Startup . . . 4-28
4.11 Completing the Installation Checklist . . . 4-28

**5 Installing Options and Accessories . . . 5-1**

5.1 Installation Notes . . . 5-1
5.2 Installing an Optional Powerware Hot Sync CAN Bridge Card . . . 5-2
5.3 Installing Distributed Bypass Control Wiring . . . 5-4
5.4 Installing an Optional Remote Monitor Panel II . . . 5-9
5.5 Installing an Optional Relay Interface Module II . . . 5-11
5.6 Installing an Optional Supervisory Contact Module II . . . 5-13
5.7 Accessory Mounting Dimensions . . . 5-15

## Section II – Operation

**6 Understanding UPS Operation . . . 6-1**

6.1 UPS System Overview . . . 6-1
6.2 Single UPS . . . 6-2
6.2.1 Modes . . . 6-2
6.2.2 Online Mode . . . 6-2
6.2.3 Energy Saver System Mode . . . 6-4
6.2.4 Harmonic Reduction System (HRS) . . . 6-4
6.2.5 Variable Module Management System . . . 6-5
6.2.6 Bypass Mode . . . 6-5
6.2.7 Battery Mode . . . 6-7
6.3 Single UPS System Oneline Configurations . . . 6-8
6.4 Multiple UPS Distributed Bypass System . . . 6-14
6.4.1 Multiple UPS Parallel System Modes . . . 6-14
6.4.2 Online Mode – Distributed Bypass . . . 6-15
6.4.3 Bypass Mode – Distributed Bypass . . . 6-16
6.4.4 Battery Mode – Distributed Bypass . . . 6-18
6.5 Multiple UPS Distributed Bypass System Oneline Configurations . . . 6-19

**7 UPS Operating Instructions . . . 7-1**

7.1 UPS Controls and Indicators . . . 7-1
7.1.1 Control Panel . . . 7-2
7.1.2 Circuit Breakers . . . 7-2
7.2 Using the LCD Control Panel . . . 7-2
7.2.1 Status Indicators . . . 7-3
7.2.2 System Events . . . 7-3
7.2.3 Using the LCD and Pushbuttons . . . 7-4

7.2.4 Using the Menu . . . 7-5
7.2.5 Mimic Screen . . . 7-5
7.2.6 Display Menu Operation . . . 7-6
7.2.7 Load Off Screen . . . 7-9
7.2.8 System Status Screen and Controls . . . 7-9
7.2.9 Load Off Screen . . . 7-12
7.3 Single UPS Operation . . . 7-13
7.3.1 Starting the UPS in Online Mode . . . 7-13
7.3.2 Enable Energy Saver System Mode from the UPS Command Menu . . . 7-14
7.3.3 Disable Energy Saver System Mode from the UPS Command Menu . . . 7-15
7.3.4 Start Energy Saver System High Alert Mode from the UPS Command Menu . . . 7-15
7.3.5 Enable Variable Module Management System Mode from the UPS Command Menu . . . 7-16
7.3.6 Disable Variable Module Management System Mode from the UPS Command Menu . . . 7-16
7.3.7 Start Variable Module Management System High Alert Mode from the UPS Command Menu . . . 7-17
7.3.8 Starting the UPS in Bypass Mode . . . 7-17
7.3.9 Enable Energy Saver System Mode from the Bypass Command Menu . . . 7-18
7.3.10 Disable Energy Saver System Mode from the Bypass Command Menu . . . 7-18
7.3.11 Start Energy Saver System High Alert Mode from the Bypass Command Menu . . . 7-19
7.3.12 Enable Variable Module Management System Mode from the Bypass Command Menu . . . 7-19
7.3.13 Disable Variable Module Management System Mode from the Bypass Command Menu . . . 7-20
7.3.14 Start Variable Module Management System High Alert Mode from the Bypass Command Menu . . . 7-20
7.3.15 Starting the UPMs . . . 7-21
7.3.16 Starting a Single UPM . . . 7-22
7.3.17 Transfer from Online to Bypass Mode . . . 7-23
7.3.18 Transfer from Bypass to Online Mode . . . 7-24
7.3.19 Transfer from Online to Bypass Mode and Shut Down UPMs . . . 7-24
7.3.20 Single UPM Shutdown . . . 7-25
7.3.21 Single UPM Restart . . . 7-26
7.3.22 UPS and Critical Load Shutdown . . . 7-27
7.3.23 Charger Control . . . 7-27
7.3.24 Using the UPS LOAD OFF Pushbutton or Command . . . 7-28
7.3.25 Using the Remote Emergency Power-off Switch . . . 7-30
7.4 Multiple UPS Distributed Bypass Operation . . . 7-31
7.4.1 Starting the Distributed Bypass System in Online Mode . . . 7-31
7.4.2 Enable Energy Saver System Mode from the UPS Command Menu . . . 7-32
7.4.3 Disable Energy Saver System Mode from the UPS Command Menu . . . 7-33
7.4.4 Start Energy Saver System High Alert Mode from the UPS Command Menu . . . 7-33
7.4.5 Enable Variable Module Management System Mode from the UPS Command Menu . . . 7-34
7.4.6 Disable Variable Module Management System Mode from the UPS Command Menu . . . 7-34
7.4.7 Start Variable Module Management System High Alert Mode from the UPS Command Menu . . . 7-35
7.4.8 Starting the Distributed Bypass System in Bypass Mode . . . 7-35
7.4.9 Enable Energy Saver System Mode from the Bypass Command Menu . . . 7-36
7.4.10 Disable Energy Saver System Mode from the Bypass Command Menu . . . 7-36
7.4.11 Start Energy Saver System High Alert Mode from the Bypass Command Menu . . . 7-37
7.4.12 Enable Variable Module Management System Mode from the Bypass Command Menu . . . 7-37
7.4.13 Disable Variable Module Management System Mode from the Bypass Command Menu . . . 7-38
7.4.14 Start Variable Module Management System High Alert Mode from the Bypass Command Menu . . . 7-39
7.4.15 Starting the UPS UPMs . . . 7-39
7.4.16 Starting a Single UPM . . . 7-40
7.4.17 Transfer from Online to Bypass Mode . . . 7-42
7.4.18 Transfer from Bypass to Online Mode . . . 7-42

7.4.19 Transfer from Online to Bypass Mode and Shut Down UPMs . . . 7-43
7.4.20 Single UPM Shutdown . . . 7-43
7.4.21 Single UPM Restart . . . 7-44
7.4.22 Single UPS Shutdown using Load Off . . . 7-45
7.4.23 Single UPS Shutdown using UPM Shutdown . . . 7-46
7.4.24 Single UPS Restart . . . 7-47
7.4.25 UPS and Critical Load Shutdown . . . 7-48
7.4.26 Charger Control . . . 7-48
7.4.27 Using the UPS LOAD OFF Pushbutton or Command . . . 7-49
7.4.28 Using the Remote Emergency Power-off Switch . . . 7-51
7.5 Color Touchscreen Control Panel . . . 7-52
7.6 Using the Color Touchscreen Control Panel . . . 7-53
7.6.1 Status Indicators . . . 7-54
7.6.2 Using the Touch Screen . . . 7-54
7.6.3 Using the Main Menu Buttons . . . 7-56
7.6.4 Power Maps Screen (Online Mode) . . . 7-57
7.6.5 Power Maps Screen (Bypass Mode) . . . 7-59
7.6.6 Command Confirmation Pop-Up . . . 7-59
7.6.7 Meters Summary Screen . . . 7-60
7.6.8 Input Meters Screen . . . 7-61
7.6.9 Input Meters Detail Screen . . . 7-63
7.6.10 Battery Meters Screens . . . 7-64
7.6.11 System Events Main Screen . . . 7-66
7.6.12 User Log . . . 7-66
7.6.13 System Status Screen and Controls . . . 7-68
7.6.14 Settings Screen . . . 7-70
7.6.15 Configuration Options Screen . . . 7-71
7.6.16 Energy Advantage Architecture (EAA) Screen . . . 7-71
7.6.17 Statistics Basic Screen . . . 7-73
7.6.18 ESS Comparison Screen . . . 7-74
7.6.19 UPS Module Map Screen . . . 7-75
7.6.20 System Overview Screen . . . 7-75
7.7 UPS Operation using the Color Touchscreen Control Panel . . . 7-76
7.7.1 Starting the UPS in Online Mode . . . 7-76

**8 Communication . . . 8-1**

8.1 X-Slot Cards . . . 8-1
8.2 eNotify Service . . . 8-2
8.2.1 eNotify Service Features . . . 8-2
8.2.2 Installing eNotify Service . . . 8-2
8.3 Power Management Software . . . 8-3
8.4 Building Alarm Monitoring . . . 8-3
8.5 General Purpose Relay Contact . . . 8-3
8.6 Remote Monitor Panel II . . . 8-4
8.7 Relay Interface Module II . . . 8-6
8.8 Supervisory Contact Module II . . . 8-7

**9 UPS Maintenance . . . 9-1**

9.1 Important Safety Instructions . . . 9-1
9.2 Performing Preventive Maintenance . . . 9-2
9.2.1 DAILY Maintenance . . . 9-2
9.2.2 MONTHLY Maintenance . . . 9-2

9.2.3 PERIODIC Maintenance . . . . . 9-4
9.2.4 ANNUAL Maintenance . . . . . 9-4
9.2.5 BATTERY Maintenance . . . . . 9-5
9.3 Installing Batteries . . . . . 9-5
9.4 Recycling the Used Battery or UPS . . . . . 9-5
9.5 Maintenance Training . . . . . 9-5
**10 Product Specifications . . . . . 10-1**
10.1 Model Numbers . . . . . 10-1
10.2 Specifications . . . . . 10-1
10.2.1 UPS Input . . . . . 10-1
10.2.2 UPS Output . . . . . 10-2
10.2.3 UPS Environmental . . . . . 10-2
**11 Warranty . . . . . W-1**

# List of Figures

Figure 1-1. Power Xpert 9395 UPS (225–275 kVA) Cabinet . . . -2
Figure 1-2. Power Xpert 9395 UPS (225–275 kVA) Cabinet with the Field Installed UPM . . . -3
Figure 3-1. UPS Cabinet Dimensions (Front View) . . . 3-4
Figure 3-2. UPS Cabinet Dimensions (Right Side View) . . . 3-4
Figure 3-3. UPS Cabinet Dimensions (Top View) . . . 3-5
Figure 3-4. UPS Cabinet Dimensions (Bottom View) . . . 3-5
Figure 3-5. UPS Cabinet Dimensions (Bottom View with Mounting Brackets) . . . 3-5
Figure 3-6. UPS Cabinet Center of Gravity . . . 3-6
Figure 3-7. Remote EPO Switch Dimensions . . . 3-6
Figure 3-8. UPS Cabinet as Shipped on Pallet . . . 3-21
Figure 4-1. Removing the Left Side Shipping Bracket . . . 4-3
Figure 4-2. Removing the Right Side Shipping Bracket . . . 4-4
Figure 4-3. Typical Bus Bar Barrel Lug Mounting – Hardware Assembly Sequence . . . 4-6
Figure 4-4. Conduit and Wire Entry Locations . . . 4-8
Figure 4-5. UPS Power Terminal Locations – Common Rectifier Feed . . . 4-9
Figure 4-6. UPS Power Terminal Detail AA – Common Rectifier Feed . . . 4-10
Figure 4-7. UPS Power Terminal Locations – Separate Rectifier Feed . . . 4-11
Figure 4-8. UPS Power Terminal Detail AA – Separate Rectifier Feed . . . 4-12
Figure 4-9. UPM Rectifier Input Power Terminal Block Detail . . . 4-12
Figure 4-10. UPS Power Terminal Detail BB – Common Battery . . . 4-14
Figure 4-11. UPS Power Terminal Detail BB – Separate Battery . . . 4-15
Figure 4-12. Interface Terminal Locations . . . 4-17
Figure 4-13. Interface Terminal Detail . . . 4-19
Figure 4-14. Typical Alarm Relay Connection . . . 4-19
Figure 4-15. Terminal Blocks TB1, TB2, and TB3 Connector Assignments . . . 4-20
Figure 4-16. Typical Battery Interface Connection . . . 4-22
Figure 4-17. Typical Battery Interface Connection – Separate Battery System . . . 4-23
Figure 4-18. X-Slot Communication Bays . . . 4-24
Figure 4-19. REPO Switch . . . 4-25
Figure 4-20. Normally-Open REPO Switch Wiring . . . 4-26
Figure 4-21. Normally-Closed REPO Switch Wiring . . . 4-27
Figure 4-22. Normally-Closed and Normally-Open REPO Switch Wiring . . . 4-27
Figure 5-1. Powerware Hot Sync CAN Bridge Card . . . 5-2
Figure 5-2. Powerware Hot Sync CAN Bridge Card Connections . . . 5-3
Figure 5-3. Distributed Bypass System CAN and Pull-Chain Simplified Interface Wiring . . . 5-5
Figure 5-4. Distributed Bypass System UPS CAN Wiring without MOBs . . . 5-5
Figure 5-5. Distributed Bypass Pull-Chain Wiring without MOBs . . . 5-6
Figure 5-6. Distributed Bypass Pull-Chain Wiring with MOBs . . . 5-7
Figure 5-7. Remote Monitor Panel II and Remote Monitor Panel II Terminal Locations . . . 5-10
Figure 5-8. Remote Monitor Panel II, Relay Interface Module II, or Supervisory Contact Module II Wiring . . . 5-10
Figure 5-9. J1, J2, J3, and J4 15-Pin D-Sub Connectors . . . 5-12
Figure 5-10. Supervisory Contact Module II Terminal Location . . . 5-13
Figure 5-11. Supervisory Contact Module II TB2 . . . 5-14
Figure 5-12. Remote Monitor Panel II Dimensions . . . 5-15
Figure 5-13. Relay Interface Module II Dimensions . . . 5-16
Figure 5-14. Supervisory Contact Module II Dimensions . . . 5-17
Figure 6-1. Main Elements of the UPS System . . . 6-1

Figure 6-2. Path of Current Through the UPS in Online Mode . . . 6-3
Figure 6-3. Path of Current Through the UPS in Bypass Mode . . . 6-6
Figure 6-4. Path of Current Through the UPS in Battery Mode . . . 6-7
Figure 6-5. UPS System – Common Rectifier Feed, Dual-Feed Configuration . . . 6-9
Figure 6-6. UPS System with Field Installed UPM – Common Rectifier Feed, Common Battery, Dual-Feed Configuration . . . 6-10
Figure 6-7. UPS System with Field Installed UPM – Common Rectifier Feed, Separate Battery, Dual-Feed Configuration . . . 6-11
Figure 6-8. UPS System with Field Installed UPM – Separate Rectifier Feed, Separate Battery, Dual-Feed Configuration . . . 6-12
Figure 6-9. Simplified Dual-Feed UPS with Maintenance Bypass Panel . . . 6-13
Figure 6-10. Path of Current through the UPSs in Online Mode – Distributed Bypass . . . 6-16
Figure 6-11. Path of Current through the UPSs in Bypass Mode – Distributed Bypass . . . 6-17
Figure 6-12. Path of Current through the UPSs in Battery Mode – Distributed Bypass . . . 6-18
Figure 6-13. Typical Distributed Bypass System (1+1 and 2+0 Configurations) . . . 6-20
Figure 6-14. Typical Distributed Bypass System (2+1 and 3+0 Configurations) . . . 6-21
Figure 6-15. Typical Distributed Bypass System (3+1 and 4+0 Configurations) . . . 6-22
Figure 7-1. UPS Controls and Indicators – Continuous Static Switch . . . 7-1
Figure 7-2. UPS Control Panel . . . 7-2
Figure 7-3. Parts of the LCD . . . 7-4
Figure 7-4. Main Menu and Mimic Screen (Online Mode) . . . 7-5
Figure 7-5. Load Off Screen . . . 7-9
Figure 7-6. Typical System Status Screen . . . 7-10
Figure 7-7. Load Off Screen . . . 7-12
Figure 7-8. REPO Operation . . . 7-30
Figure 7-9. Color Touchscreen Control Panel Location (Typical) . . . 7-52
Figure 7-10. UPS Color Touchscreen Control Panel (Typical) . . . 7-53
Figure 7-11. Parts of the Touch Screen . . . 7-54
Figure 7-12. Sign In or Password Request Screen . . . 7-55
Figure 7-13. Home Screen . . . 7-56
Figure 7-14. Main Menu and Power Maps Screen (Online Mode) . . . 7-57
Figure 7-15. Output kVA Screen from Home Screen . . . 7-57
Figure 7-16. Average Efficiency Screen from Home Screen . . . 7-58
Figure 7-17. Consumption Screen from Home Screen . . . 7-58
Figure 7-18. Bypass Screen . . . 7-59
Figure 7-19. Typical Command Confirmation Screen (Charger Off) . . . 7-59
Figure 7-20. Meters Summary Screen . . . 7-60
Figure 7-21. Input Meters Screen . . . 7-61
Figure 7-22. Bypass Meters Screen . . . 7-61
Figure 7-23. Output Meters Screen . . . 7-62
Figure 7-24. Input Meters Detail Screen . . . 7-63
Figure 7-25. Select Source Screen . . . 7-63
Figure 7-26. Battery Meters Screen . . . 7-64
Figure 7-27. Battery Log Screen . . . 7-64
Figure 7-28. Battery Log Detail . . . 7-65
Figure 7-29. Battery Log Summary Screen . . . 7-65
Figure 7-30. System Events Screen . . . 7-66
Figure 7-31. User Log Screen . . . 7-67
Figure 7-32. User Log Detail Screen . . . 7-67
Figure 7-33. System Status Screen . . . 7-68
Figure 7-34. Module Controls Screen . . . 7-68
Figure 7-35. Module Control Detail Screen . . . 7-69
Figure 7-36. Online Mode Metering Method Option Screen . . . 7-69
Figure 7-37. Bypass Mode Metering Method Option Screen . . . 7-70

Figure 7-38. Settings Screen . . . . . 7-70
Figure 7-39. Configuration Options Screen . . . . . 7-71
Figure 7-40. Energy Advantage Architecture (EAA) Screen . . . . . 7-71
Figure 7-41. Disable ESS Screen . . . . . 7-72
Figure 7-42. HRS Metering Screen . . . . . 7-72
Figure 7-43. High Alert Timer Screen . . . . . 7-73
Figure 7-44. Statistics Basic Screen . . . . . 7-73
Figure 7-45. Statistics Data Detail Screen . . . . . 7-74
Figure 7-46. ESS Comparison Screen . . . . . 7-74
Figure 7-47. UPS Module Map Screen . . . . . 7-75
Figure 7-48. System Overview Screen . . . . . 7-75
Figure 8-1. Optional X-Slot Cards . . . . . 8-1
Figure 8-2. Remote Monitor Panel II . . . . . 8-4
Figure 8-3. Relay Interface Module II . . . . . 8-6
Figure 8-4. Supervisory Contact Module II . . . . . 8-7
Figure 9-1. UPS Filter Locations . . . . . 9-3
Figure 9-2. FI-UPM Air Filter Location . . . . . 9-4

# Chapter 1 Introduction

The Power Xpert ™ 9395 uninterruptible power supply (UPS) is a true online, continuous-duty, transformerless, double-conversion, solid-state, three-phase system, providing conditioned and uninterruptible AC power to protect the customer's load from power failures.

The Power Xpert 9395 225–275 kVA UPS cabinet contains two sections, an integrated system bypass module (ISBM) rated for a maximum of 275 kVA and a single Uninterruptible Power Module (UPM) rated for a maximum of 275 kVA.

The UPS is available as a single unit or an optional multiple unit distributed bypass system (see paragraph 1.2.7).

The Power Xpert 9395 online power protection system is used to prevent loss of valuable electronic information, minimize equipment downtime, and minimize the adverse effect on production equipment due to unexpected power problems.

The Power Xpert 9395 UPS continually monitors incoming electrical power and removes the surges, spikes, sags, and other irregularities that are inherent in commercial utility power. Working with a building's electrical system, the UPS system supplies clean, consistent power that sensitive electronic equipment requires for reliable operation. During brownouts, blackouts, and other power interruptions, batteries provide emergency power to safeguard operation.

The UPS is housed in a single, free-standing cabinet with safety shields behind the door and front panels for hazardous voltage protection. The cabinet matches the battery and distribution cabinets in style and color. Figure 1-1 shows the Power Xpert 9395 UPS (225–275 kVA). Figure 1-2 shows the Power Xpert 9395 UPS (225–275 kVA) with the FI-UPM.

***NOTE*** *Startup and operational checks must be performed by an authorized Eaton Customer Service Engineer, or the warranty terms specified on page W-1 become void. This service is offered as part of the sales contract for the UPS. Contact an Eaton service representative in advance (usually a two-week notice is required) to reserve a preferred startup date.*

## 1.1 UPS Standard Features

The UPS has many standard features that provide cost-effective and consistently reliable power protection. The descriptions in this section provide a brief overview of the UPS standard features.

### 1.1.1 Installation Features

Cabinets can be permanently bolted to the floor.

Power and control wiring can be routed through the top or bottom of the cabinet with connections made to easily accessible terminals. External sensing and monitoring control wire must be installed in accordance with Class 1 wiring methods.

### 1.1.2 Control Panel

The control panel, located on the front of the UPS, can be either a liquid crystal display (LCD) and pushbutton switches or a 10-inch color touchscreen to control the operation of the UPS and to display the status of the UPS system. See Chapter 7, "UPS Operating Instructions," for additional information.

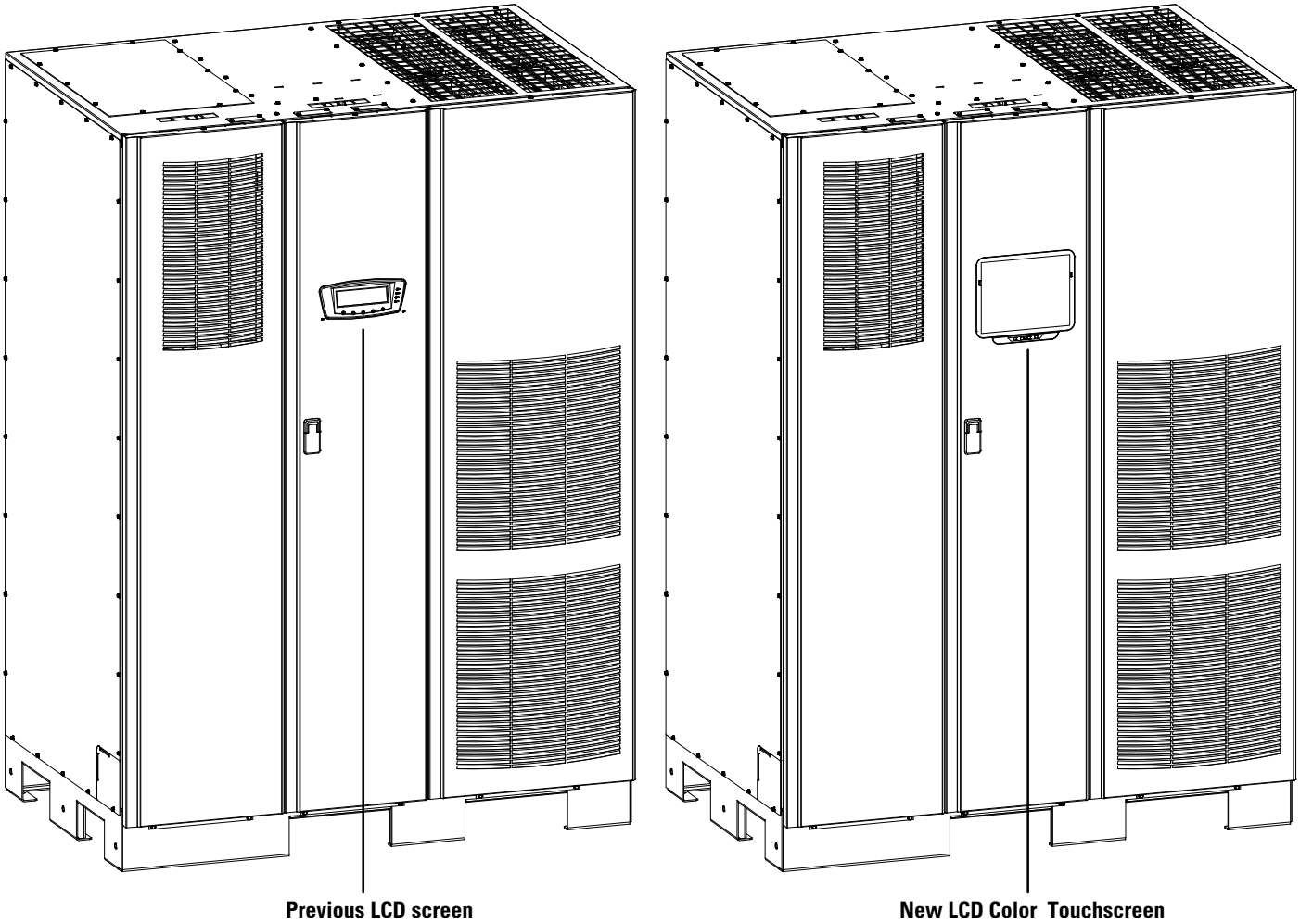


**Figure 1-1. Power Xpert 9395 UPS (225–275 kVA) Cabinet**

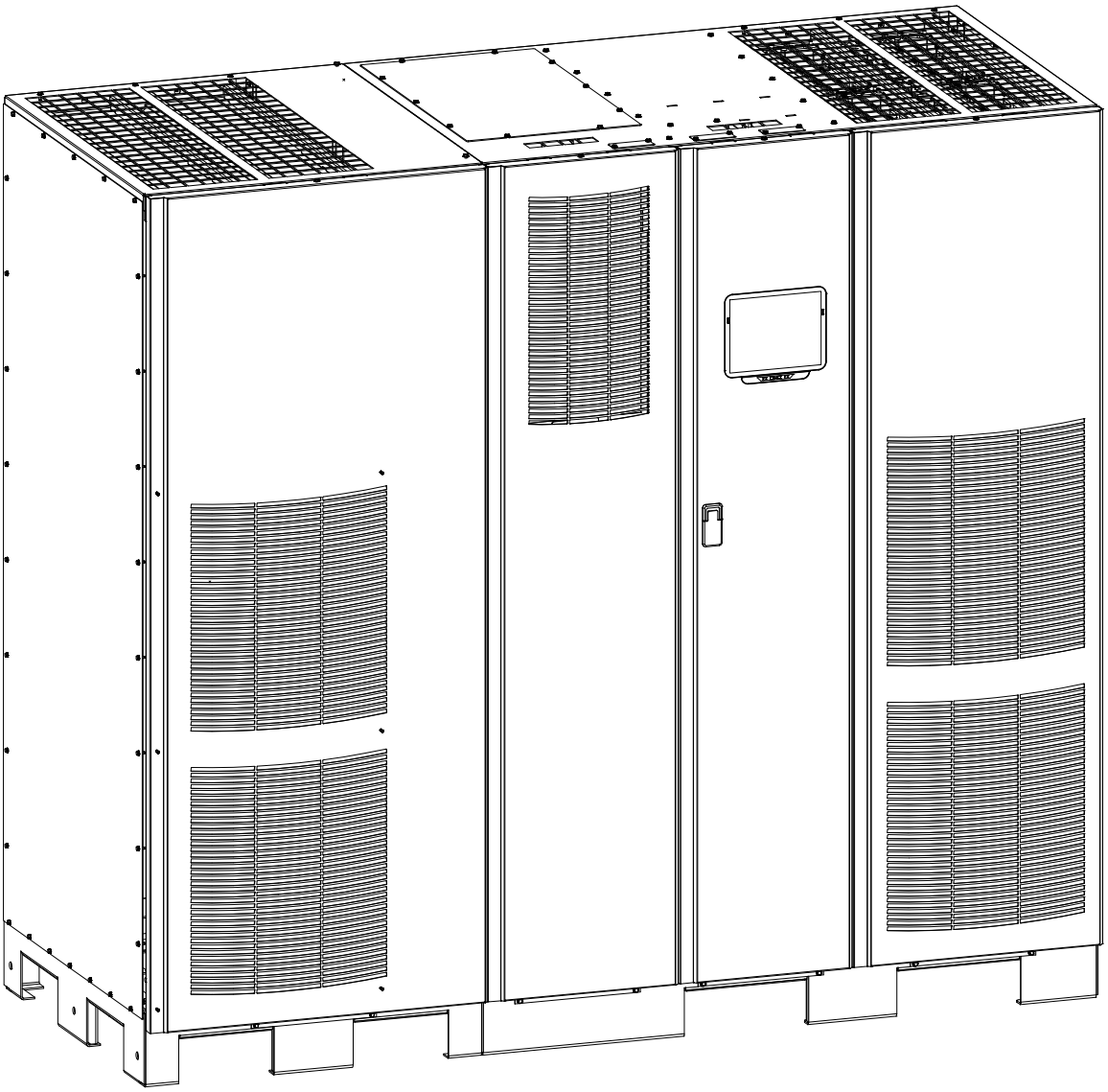

**Figure 1-2. Power Xpert 9395 UPS (225–275 kVA) Cabinet with the Field Installed UPM**

### 1.1.3 Customer Interface

- **Building Alarm Monitoring** – Up to five inputs in the UPS are available to connect the facility's alarm system contacts. Some system configurations may limit the number of inputs available. The UPS uses these inputs to monitor the building alarms in addition to the UPS status. See Chapter 8, “Communication,” for additional information.
- **Alarm Contact** – One alarm contact is provided for connection to equipment at the facility, such as a light, an audible alarm, or a computer terminal. The equipment connected to this contact alerts you to a UPS alarm. See Chapter 8, “Communication,” for additional information.
- **X-Slot Communication Bays** – Four communication bays are standard equipment. One to four optional X-Slot® connectivity cards can be installed in the UPS module at any time. X-Slot cards are quickly installed at the front of the UPS and are hot-pluggable. See Chapter 8, “Communication,” for additional information.

### 1.1.4 Advanced Battery Management

A three-stage charging system increases battery service life by optimizing recharge time, and protects batteries from damage due to high current charging and inverter ripple currents. Charging at high currents can overheat and damage batteries.

### 1.1.5 Power Management Software

Intelligent Power Management and Intelligent Power Protector software are available through Eaton support. See Chapter 8, "Communication," for additional information.

## 1.2 Options and Accessories

Contact an Eaton sales representative for information about the following options.

### 1.2.1 Integrated Battery Cabinets

Battery backup protection can be provided by equipping the UPS system with Power Xpert 9395 battery cabinets containing sealed lead-acid, maintenance-free batteries. The cabinets are designed for *standalone* installation and may be installed adjacent to the UPS or in a separate location. The recommended installation location for adjacent battery cabinets is on the right side of the UPS cabinet to allow for future expansion using an external module.

Consult the *.Power Xpert 9395 Integrated Battery Cabinet (Model 1085 and 1085HR) Installation Manual* for specifics on battery cabinet usage with the PowerXpert 9395.

### 1.2.2 Field Installed UPM

A Field Installed UPM (FI-UPM) provides N+1 redundancy for the UPS system. The FI-UPM may be installed at any time in the future when power needs change. The module cabinet is installed on the left side of the UPS cabinet and is wired directly to the UPS. No input or output wiring changes are needed for redundancy. Operation remains the same as the original UPS.

### 1.2.3 Maintenance Bypass Module

The Maintenance Bypass Module (MBM) enables power to completely bypass and isolate the UPS so that the UPS can be safely serviced or replaced without interrupting power to critical systems.

### 1.2.4 Sync Control

An optional Power Xpert 9395 Sync Control maintains the critical load outputs of two separate single module Power Xpert 9395 UPS systems in synchronization. This option facilitates the uninterrupted transfer of the load from one load bus to another by means of transfer switches. The Sync Control is housed in a wall-mounted panel that can be located between the UPS units for easy wiring.

### 1.2.5 Single-Feed Kit

An optional kit is available for converting the dual-feed rectifier and bypass inputs to a single-feed configuration. The kit consists of jumpers for each phase, and the hardware required for installation.

### 1.2.6 Separate Rectifier Input

If a FI-UPM is to be installed with the Power Xpert 9395 225–275 kVA UPS at the initial installation or in the future, the UPS can be supplied with separate rectifier inputs for each UPM. Separate inputs provide increased flexibility and reliability by allowing multiple input sources to supply the UPS. Input circuit breaker CB1 is not installed with this configuration. AC input control to the UPS and each UPM rectifier is to be provided by the customer.

All sources that feed the separate rectifier inputs must be from a common ground point.

### 1.2.7 Distributed Bypass System

There are two types of redundancy: UPS based (based on the number of UPSs) and UPM based (based on the number of UPMs). Each UPS contains one or two UPMs.

A distributed bypass UPS system with two to five UPSs can be installed to provide a capacity and/or redundant system. This load sharing system provides more capacity than a single UPS, and can provide backup, depending on the load and configuration. In addition, when one UPM is taken out of service for maintenance or is not operating properly, a redundant UPM continues to supply uninterrupted power to the critical load. A Powerware Hot Sync® Controller Area Network (CAN) Bridge Card provides connectivity and operational mode control. The distributed bypass system consists of two to five UPSs each with a parallel CAN card, and a customer-supplied tie cabinet or load distribution panel to act as a tie point.

All UPSs in the distributed bypass system must contain the same number of UPMs. Mixed UPS kVA ratings are not permitted.

The tie cabinet must contain Module Output Breakers (MOBs) with dual auxiliary contacts for control of the system. Without dual auxiliary MOBs, UPMs are not allowed to go to bypass individually during servicing. All UPMs will go to bypass instead of just the UPM needing service, decreasing critical load protection. With dual auxiliary MOBs, one UPM can be bypassed while the remaining UPMs support the load as long as the remaining UPMs have the capacity to do so.

### 1.2.8 Input Output Module Configuration

The UPS can be supplied in an Input Output Module (IOM) configuration without the bypass input connections, the static switch, the motorized wraparound bypass breaker, and the backfeed protection contactor. This configuration is primarily used in multiple UPS parallel systems that do not need a bypass for each UPS and use a separate System Bypass Module (SBM) to provide system bypass capabilities.

### 1.2.8 Continuous Static Switch

A continuous static switch is used to provide transfer of the load from the inverter to the bypass source in the event the inverter become unavailable. The continuous static switch eliminates the need for an additional motorized wraparound bypass breaker.

### 1.2.8 Inherent Redundancy

To deliver greater reliability, the Power Xpert 9395 UPS can be configured by an authorized Eaton Customer Service Engineer for inherent redundancy if a FI-UPM is installed. When configured, the UPS automatically becomes redundant if the load is at or below the capacity of the UPMs minus the capacity of one UPM. Under normal conditions the UPMs in the UPS share the load equally. If one or more UPMs becomes unavailable and the load is at or below the capacity of remaining UPMs, the remaining UPMs supply the load instead of transferring to bypass.

If the capacity of the UPMs falls below the redundancy level or the load increases above redundancy level, but is still able to maintain the load, a loss of redundancy alarm is sounded. If the load exceeds the capacity of remaining UPMs, the UPS transfers to bypass.

### 1.2.9 Energy Saver System and High Alert Modes

***NOTE*** *The Variable Module Management System and Energy Saver System modes are mutually exclusive.*

As a subset of Online mode, the Energy Saver System (ESS) mode maximizes efficiency by eliminating unnecessary power conversion when the commercial power source is within acceptable voltage and frequency limits. In this mode, the UPS is actively monitoring the critical bus and instantly and seamlessly transitions to double-conversion mode (inverter online) if a commercial electrical power brownout, blackout, overvoltage, undervoltage, or out-of-tolerance frequency condition occurs.

In High Alert mode the unit transfers from ESS mode to double-conversion mode or if in double-conversion mode remains in double-conversion mode for a default time period of one hour. High Alert mode allows the user to place the unit in double-conversion mode when outside conditions could cause a power disturbance. At the completion of the time period, the unit defaults back to ESS mode. If the High Alert command is received during the time period, the timer will be restarted.

### 1.2.11 Harmonic Reduction System (HRS)

The Harmonic Reduction system mode of the 9395 UPS allows the UPS to actively reduce the input Total Demand Distortion (TDD) and increase the input power factor while maintaining high efficiency operation in ESS mode. The UPS uses one of its UPMs to perform this active harmonic cancellation.

HRS mode uses an extra set of sensors (CTs) on the output bus of the unit. These sensors measure the harmonics created by loads attached to the UPS output and the system actively reduces these harmonics.

***NOTE*** *Total Demand Distortion as defined by IEEE 519-1992 is the total root-sum-square harmonic current distortion, in percent, of the maximum demand load current (the nameplate rating of a fully rated UPS).*

The system must be in ESS mode to activate HRS mode. In HRS mode, the inverter is ON, the rectifier is OFF and the output contactor is CLOSED.

HRS is a normal operating mode, not an alarm condition. The NORMAL light appears on the front of the UPS.

### 1.2.10 Variable Module Management System and High Alert Modes

***NOTE*** *Energy Saver System mode requires the UPS to be factory built with a Continuous Static Switch (CSS).*

***NOTE*** *The Variable Module Management System and Energy Saver System modes are mutually exclusive.*

The Variable Module Management System (VMMS) mode maintains UPM redundancy and achieves higher efficiencies by intelligently controlling the UPM's load level. The efficiency rating for each UPM is highest when loads are greater than 50% of the system rating. Therefore, shifting the load to fewer UPMs can achieve higher efficiencies when the UPS load is lighter.

In VMMS mode, the UPS is actively monitoring the critical bus and UPMs are available to assume load in less than 2 ms to respond to load changes.

The VMMS feature has three configurable modes of operation: Online mode, Online mode with VMMS, and High Alert mode. All modes are selectable from the front panel.

VMMS mode supports both distributed bypass and SBM parallel configurations.

In High Alert mode, all idle UPMs go online for one hour. At the completion of the hour, the UPS defaults back to VMMS mode. If the High Alert command is received during the one hour, the one hour timer will be restarted.

### 1.2.12 Monitoring and Communication

The UPS system can be further enhanced by adding optional accessories such as a Remote Emergency Power-off (REPO) control, RMP II, SCM II, RIM II, or X-Slot communication cards. See Chapter 5 , "Options" for additional information.

- **Remote Monitor Panel II (RMP II)** – An optional RMP II contains backlit status indicators and a local horn, allowing monitoring of the operational status and alarm condition of the UPS from virtually any location within the facility.
- **Relay Interface Module II (RIM II)** – An optional RIM II uses relay contact closures to indicate the UPS operating status and alarm condition.
- **Supervisory Contact Module II (SCM II)** – An optional SCM II establishes an interface between the UPS system equipment and the customer's monitor.
- **X-Slot Cards** – Optional X-Slot cards support several protocols, such as SNMP, HTTP, Modbus TCP, and Modbus® RTU.
- **eNotify Remote Monitoring and Diagnostics Service** – An optional service that provides 24/7 remote monitoring of 43 alarms, temperature/humidity and battery charge information, daily heartbeat check, and monthly report. The service also provides customer notification of significant alarms, remote diagnostics, and dispatch of technicians. A UPS PXGX Card is required in an X-Slot communication bay. An optional Environmental Monitoring Probe (EMP) is required for temperature/humidity monitoring.

See Chapter 8, "Communication," for additional information on monitoring and communication features.

## 1.3 Battery System

Although not provided with the UPS, a battery system is required to provide emergency short-term backup power to safeguard operation during brownouts, blackouts, and other power interruptions. The battery system should be equipped with lead-acid batteries. An external battery disconnect switch must be used.

The UPMs may be powered with either a common or separate battery system. In a common battery system, single and multiple UPMs are powered from one common battery source. In a separate battery system, multiple UPMs are each powered from separate battery sources.

UPSs in distributed bypass and parallel systems must use a separate battery system.

Consult the *Power Xpert 9395 Integrated Battery Cabinet (Model 1085 and 1085HR) Installation Manual f*or specifics on battery cabinet usage with the PowerXpert 9395.

A supplemental 48 Vdc shunt trip signal for the battery disconnect device is provided by the UPS, but is not required for normal operation.

***NOTE*** *The 9395 system can trip a maximum of six battery cabinets total. This applies to both the 1085 standard and High Rate series batteries. If more than six battery cabinets in total are needed in a separate UPM battery configuration, DO NOT hook up the shunt trips.*

## 1.5 Using This Manual

This manual describes how to install and operate the Power Xpert 9395 UPS (225–275 kVA) cabinet. Read and understand the procedures described in this manual to ensure trouble-free installation and operation. In particular, be thoroughly familiar with the REPO procedure (see paragraph 7.3.25).

The information in this manual is divided into sections and chapters. The system, options, and accessories being installed dictate which parts of this manual should be read. At a minimum, Chapters 1 through 4 and Chapter 7 should be examined.

Read through each procedure before beginning the procedure. Perform only those procedures that apply to the UPS system being installed or operated.

## 1.6 Conventions Used in This Manual

This manual uses these type conventions:

- **Bold type** highlights important concepts in discussions, key terms in procedures, and menu options, or represents a command or option that you type or enter at a prompt.
- *Italic type* highlights notes and new terms where they are defined.
- `Screen type` represents information that appears on the screen or LCD.

| Icon | Description |
|---|---|
| | Information notes call attention to important features or instructions. |
| [Keys] | Brackets are used when referring to a specific key, such as [Enter] or [Ctrl]. |

In this manual, the term *UPS* refers only to the UPS cabinet and its internal elements. The term *UPS system* refers to the entire power protection system – the UPS cabinet, the battery cabinet, and options or accessories installed.

## 1.7 Symbols, Controls, and Indicators

The following are examples of symbols used on the UPS or accessories to alert you to important information:

RISK OF ELECTRIC SHOCK - Observe the warning associated with the risk of electric shock symbol.

CAUTION: REFER TO OPERATOR'S MANUAL - Refer to your operator's manual for additional information, such as important operating and maintenance instructions.

This symbol indicates that you should not discard the UPS or the UPS batteries in the trash. This product contains sealed, lead-acid batteries and must be disposed of properly. For more information, contact your local recycling/reuse or hazardous waste center.

This symbol indicates that you should not discard waste electrical or electronic equipment (WEEE) in the trash. For proper disposal, contact your local recycling/reuse or hazardous waste center.

## 1.8 For More Information

Refer to the *Power Xpert 9395 Integrated Battery Cabinet (Model 1085 and 1085HR) Installation Manual* for the following additional information:

- Integrated Battery Cabinet (IBC) installation instructions, including site preparation, planning for installation, wiring, and safety information.
- Detailed illustrations of the cabinet, including dimension and connection point drawings.

Refer to the *Eaton 9315, 9390 and 9395 Sync Control Installation and Operation Manual* for the following additional information:

- Installation instructions, including site preparation, planning for installation, and wiring and safety information. Detailed illustrations of the cabinet with dimensional and connection point drawings are provided.
- Operation, including controls, functions of the standard and optional features, procedures for using with the UPS, and information about maintenance.

Refer to the *Power Xpert 9395 Maintenance Bypass Module (275 kVA and 550 kVA) Installation and Operation Manual* for the following additional information:

- Installation instructions, including site preparation, planning for installation, and wiring and safety information. Detailed illustrations of the cabinet with dimensional and connection point drawings are provided.
- Operation, including controls, functions of the standard and optional features, procedures for using with the UPS, and information about maintenance.

Refer to the *Power Xpert 9395 Field Installed UPM Mechanical Installation Manual* for the following additional information:

- Mechanical installation instructions, including site preparation, planning for mechanical installation, and safety information.
- Detailed illustrations of the cabinet, including dimension and pallet removal drawings.

Visit www.eaton.com/powerquality or contact an Eaton service representative for information on how to obtain copies of these manuals.

## 1.9 Getting Help

If help is needed with any of the following:

- Scheduling initial startup
- Regional locations and telephone numbers
- A question about any of the information in this manual
- A technical question this manual does not answer

Please call the Help Desk at:

| | |
|---|---|
| United States: | 1-800-843-9433 or 1-919-870-3028 |
| Canada: | 1-800-461-9166 ext 260 |
| All other countries: | Call your local service representative |

Please use the following e-mail for manual comments, suggestions, or to report a technical error in this manual.

**E-ESSDocumentation@eaton.com**

# Chapter 2 Safety Warnings

## IMPORTANT SAFETY INSTRUCTIONS
## SAVE THESE INSTRUCTIONS

This manual contains important instructions that should be followed during installation and maintenance of the UPS and batteries. Read all instructions before operating the equipment and save this manual for future reference.

The UPS is designed for industrial or computer room applications, and contains safety shields behind the door and front panels. However, the UPS is a sophisticated power system and should be handled with appropriate care.

### DANGER

This UPS contains **LETHAL VOLTAGES**. All repairs and service should be performed by **AUTHORIZED SERVICE PERSONNEL ONLY**. There are **NO USER SERVICEABLE PARTS** inside the UPS.

### WARNING

- The UPS is powered by its own energy source (batteries). The output terminals may carry live voltage even when the UPS is disconnected from an AC source.
- To reduce the risk of fire or electric shock, install this UPS in a temperature and humidity controlled, indoor environment, free of conductive contaminants. Ambient temperature must not exceed 40°C (104°F). Do not operate near water or excessive humidity (95% maximum). The system is not intended for outdoor use.
- Ensure all power is disconnected before performing installation or service.
- Batteries can present a risk of electrical shock or burn from high short-circuit current. The following precautions should be observed: 1) Remove watches, rings, or other metal objects; 2) Use tools with insulated handles; 3) Do not lay tools or metal parts on top of batteries; 4) Wear rubber gloves and boots.
- ELECTRIC ENERGY HAZARD. Do not attempt to alter any battery wiring or connectors. Attempting to alter wiring can cause injury.
- Do not open or mutilate batteries. Released electrolyte is harmful to the skin and eyes. It may be toxic.

### CAUTION

- Installation or servicing should be performed by qualified service personnel knowledgeable of batteries and required precautions. Keep unauthorized personnel away from batteries. Consider all warnings, cautions, and notes before installing or replacing batteries. *DO NOT DISCONNECT the batteries while the UPS is in Battery mode.*
- Replace batteries with the same number and type of batteries as originally installed in the UPS.
- Disconnect the charging source prior to connecting or disconnecting terminals.
- Determine if the battery is inadvertently grounded. If it is, remove the source of the ground. Contacting any part of a grounded battery can cause a risk of electric shock. An electric shock is less likely if you disconnect the grounding connection before you work on the batteries.
- Proper disposal of batteries is required. Refer to local codes for disposal requirements.
- Do not dispose of batteries in a fire. Batteries may explode when exposed to flame.
- Keep the UPS door closed and front panels installed to ensure proper cooling airflow and to protect personnel from dangerous voltages inside the unit.
- Do not install or operate the UPS system close to gas or electric heat sources.

- The operating environment should be maintained within the parameters stated in this manual.
- Keep surroundings uncluttered, clean, and free from excess moisture.
- Observe all DANGER, CAUTION, and WARNING notices affixed to the inside and outside of the equipment.

**CAUTION**

To prevent damage to the wiring channel and wiring in the UPS cabinet base when lifting or moving the cabinet:

- Lift and move the cabinet using only the front or rear forklift slots.
- Verify that the forklift forks are in a horizontal position before inserting them into the forklift slots. DO NOT angle fork tips upward.
- Insert the forks all the way through the base. DO NOT insert forks partially into the base to move the cabinet.
- Forks may be partially inserted into the front or rear forklift slots for minor positioning if the forks are kept in a horizontal position with no upward angling.
- DO NOT use the forklift slots on the end of the cabinet to move the cabinet.
- End forklift slots may be used for minor positioning if the forks are kept in a horizontal position with no upward angling.

If these instructions are not followed, damage to the wiring channel and wiring will occur.

**AVERTISSEMENT!**

- Les batteries peuvent présenter un risque de décharge électrique ou de brûlure par des courts-circuits de haute intensité. Prendre les précautions nécessaires.
- Pour le replacement, utiliser le même nombre et modéle des batteries.

**ATTENTION!**

- Une mise au rebut réglementaire des batteries est obligatoire. Consulter les règlements en vigueur dans votre localité.
- Ne jamais jeter les batteries au feu. L'exposition aux flammes risque de les faire exploser.

# Section I
# Installation

# Chapter 3 UPS Installation Plan and Unpacking

Use the following basic sequence of steps to install the UPS:

1. Create an installation plan for the UPS system (Chapter 3).
2. Prepare your site for the UPS system (Chapter 3).
3. Inspect and unpack the UPS cabinet (Chapter 3).
4. Unload and install the UPS cabinet, and wire the system (Chapter 4).
5. Install features, accessories, or options, as applicable (Chapter 5).
6. Complete the Installation Checklist (Chapter 4).
7. Have authorized service personnel perform preliminary operational checks and start up the system.

***NOTE*** *Startup and operational checks must be performed by an authorized Eaton Customer Service Engineer, or the warranty terms specified on page W-1 become void. This service is offered as part of the sales contract for the UPS. Contact an Eaton service representative in advance (usually a two-week notice is required) to reserve a preferred startup date.*

## 3.1 Creating an Installation Plan

Before installing the UPS system, read and understand how this manual applies to the system being installed. Use the procedures and illustrations in paragraph 3.2 and Chapter 4 to create a logical plan for installing the system.

## 3.2 Preparing the Site

For the UPS system to operate at peak efficiency, the installation site should meet the environmental parameters outlined in this manual. If the UPS is to be operated at an altitude higher than 1500m (5000 ft), contact an Eaton service representative for important information about high altitude operation. The operating environment must meet the weight, clearance, and environmental requirements specified.

### 3.2.1 Environmental Considerations

Make sure that the environment for the 9395 UPS meets the following operating restrictions:

The environmental requirements specified below are for the air at the intake ports of the 9395, and are the maximum, not to exceed, ratings.

- There shall be at least a 1.8°F (1.0°C) difference between the dry bulb temperature and the wet bulb temperature, at all times, to maintain a non-condensing environment.
- The maximum rate of temperature change shall be limited to 3°F over 5 minutes (36°F/hour), based on the ASHRAE Standard 90.1-2013.

Cautions regarding UPS operating environmental conditions:

The newer, more energy efficient data center cooling methods (such as air side economization) can create much wider ranges of temperature and Relative Humidity (RH) in the UPS room and/or data center.

There are two aspects of this increased operating environment that can, if ignored, create issues:

- One is the creation of microclimates, which are persistent variations of temperature and/or RH within a single room; for example one side of the room is always cooler than the other side, no matter what the actual temperature is.
- The other aspect is the rate of change of temperature and/or RH, which can occur during transitions within the cooling system. Examples: changing the mixture ratio of inside versus outside air, or external changes in the outside air when going from nighttime into day, and back to night.

When ignored, either one of these aspects can create an undesirable microclimate at the UPS location. If the environment created by this microclimate exceeds the UPS operating specification, the UPS reliability, over time, will be reduced. These same environmental extremes will also create reliability concerns for any servers that are exposed to them.

### 3.2.2 Installation Considerations

The UPS system installation must meet the following guidelines:

- The system must be installed on a level floor suitable for computer or electronic equipment.
- The system must be installed in a temperature and humidity controlled indoor area free of conductive contaminants.
- The cabinet can be installed in *line-up-and-match* or *standalone* configurations.

Failure to follow guidelines may void your warranty.

The UPS equipment operating environment must meet the maximum weight requirements shown in Table 3-1 and the size requirements shown in Figure 3-1 through Figure 3-7. Dimensions are in millimeters (inches).

For Field Installed UPM (FI-UPM) weights and dimensions, refer to the *Power Xpert 9395 Field Installed UPM Mechanical Installation Manual*, listed in paragraph 1.8.

Table 3-1 Includes the weights of the heaviest cabinet configuration. Actual weights may be less due to installed configuration. Weights are in kilograms (pounds).

**Table 3-1. UPS Cabinet Maximum Weights**

| Model | Maximum Weight kg (lb) | |
|---|---|---|
| | Shipping | Installed |
| Power Xpert 9395-250/228<br>Power Xpert 9395-275/225<br>Power Xpert 9395-275/275 | 889 (1960) | 862 (1900) |

The UPS cabinets use forced air cooling to regulate internal component temperature. Air inlets are in the front of the cabinet and outlets are in the top. Allow clearance in front of and above each cabinet for proper air circulation. The clearances required around the UPS cabinet are shown in Table 3-2. Dimensions are in millimeters (inches).

**Table 3-2. UPS Cabinet Clearances**

| | |
|---|---|
| **From Top of Cabinet** | 457.2 mm (18″) minimum clearance for ventilation |
| **From Front of Cabinet** | 914.4 mm (36″) working space |
| **From Back of Cabinet** | None Required |
| **From Right Side of Cabinet** | 152.4 mm (6″) working space |
| **From Left Side of Cabinet** | None Required |

The basic environmental requirements for operation of the UPS are:

- Ambient Temperature Range: 0–40°C (32–104°F)
- Recommended Operating Range: 20–25°C (68–77°F)
- Maximum Relative Humidity: 95%, non-condensing

**CAUTION**

If Eaton battery cabinets are located in the same room as the UPS, the battery cabinet environmental requirements supersede the UPS requirements. Operating temperatures above the recommended range will result in decreased battery life and performance, and will reduce or void the battery warranty. Refer to Eaton's *Terms and Conditions of Sale with Battery Replacement Coverage* and the *Battery Replacement Price Book* for more information. These documents can be found at www.eaton.com/powerquality or contact an Eaton service representative to obtain copies.

The UPS ventilation requirements are shown in Table 3-3.

**Table 3-3. Air Conditioning or Ventilation Requirements During Full Load Operation**

| Model | Rating | Input/Output Voltage | Heat Rejection BTU/hr × 1000 (kg-cal/hr) | Ventilation Required for Cooling Air Exhaust |
|---|---|---|---|---|
| Power Xpert 9395-250/228 | 228 kVA | 480/480 | 44 (11054) | Approximately 826 liter/sec (1750 CFM)<br>With Field Installed UPM Approximately 1652 liter/sec (3500 CFM) |
| Power Xpert 9395-275/225 | 225 kVA | 400/400 | 43 (10943) | |
| | | 480/480 | 44 (11054) | |
| Power Xpert 9395-275/275 | 275 kVA | 400/400 | 53 (13375) | |
| | | 480/480 | 54 (13510) | |

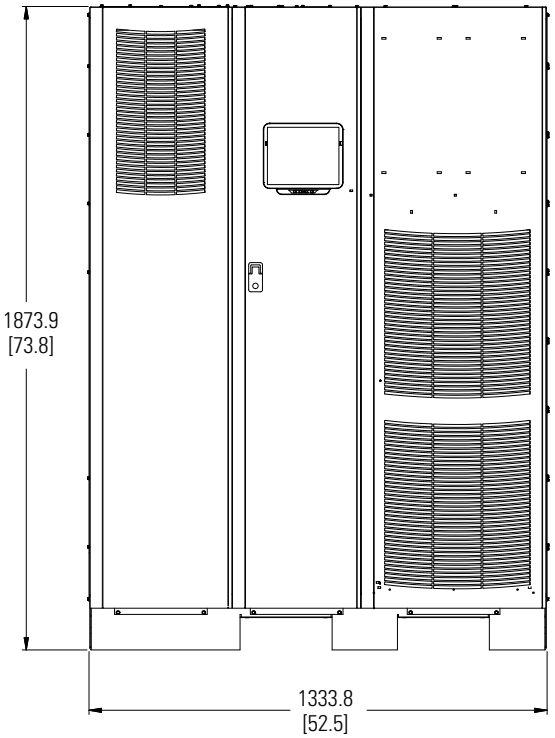


Dimensions are in millimeters [inches].

**Figure 3-1. UPS Cabinet Dimensions (Front View)**

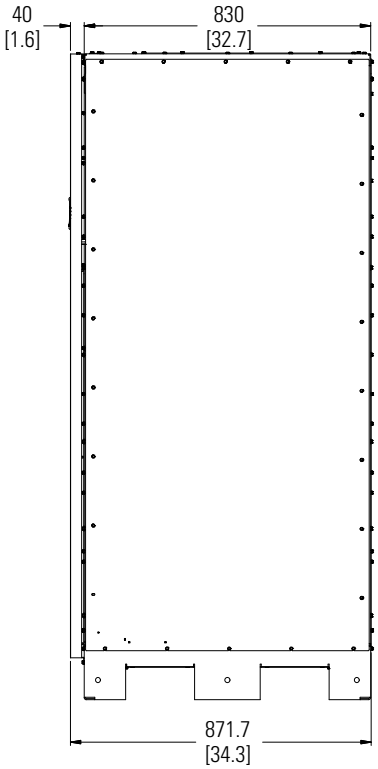


Dimensions are in millimeters [inches].

**Figure 3-2. UPS Cabinet Dimensions (Right Side View)**

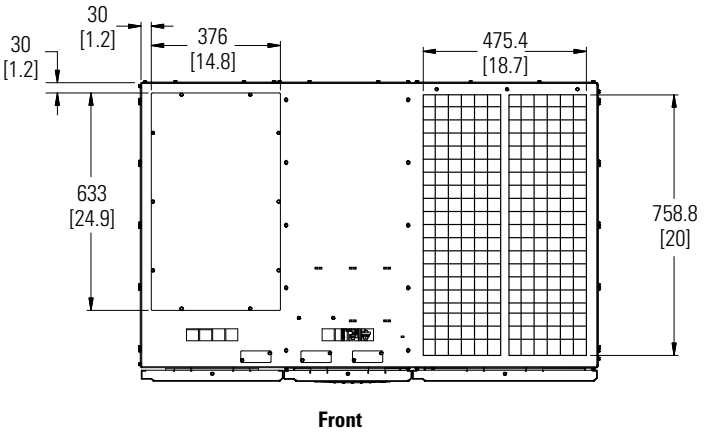


Dimensions are in millimeters [inches].

**Figure 3-3. UPS Cabinet Dimensions (Top View)**

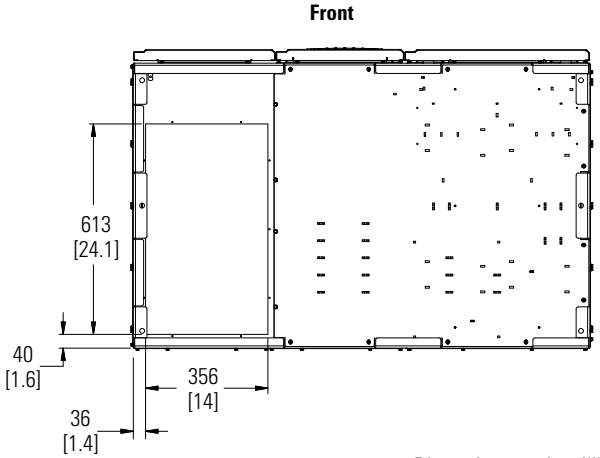


Dimensions are in millimeters [inches].

**Figure 3-4. UPS Cabinet Dimensions (Bottom View)**

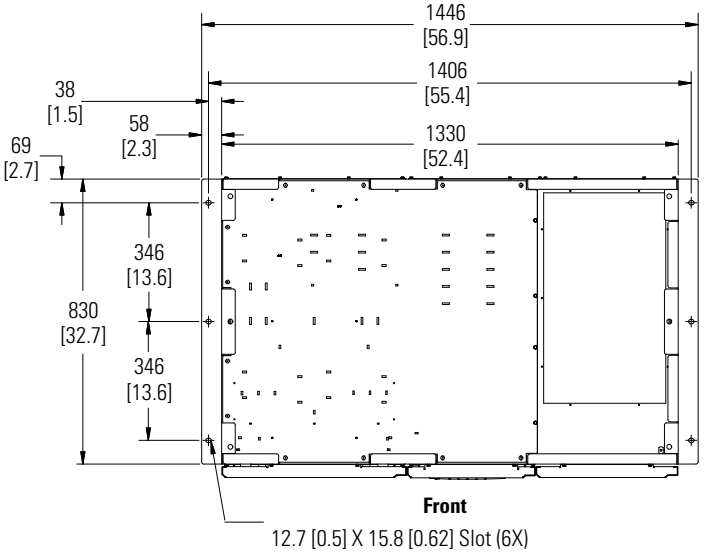


Dimensions are in millimeters [inches].

**Figure 3-5. UPS Cabinet Dimensions (Bottom View with Mounting Brackets)**

**Figure 3-6. UPS Cabinet Center of Gravity**

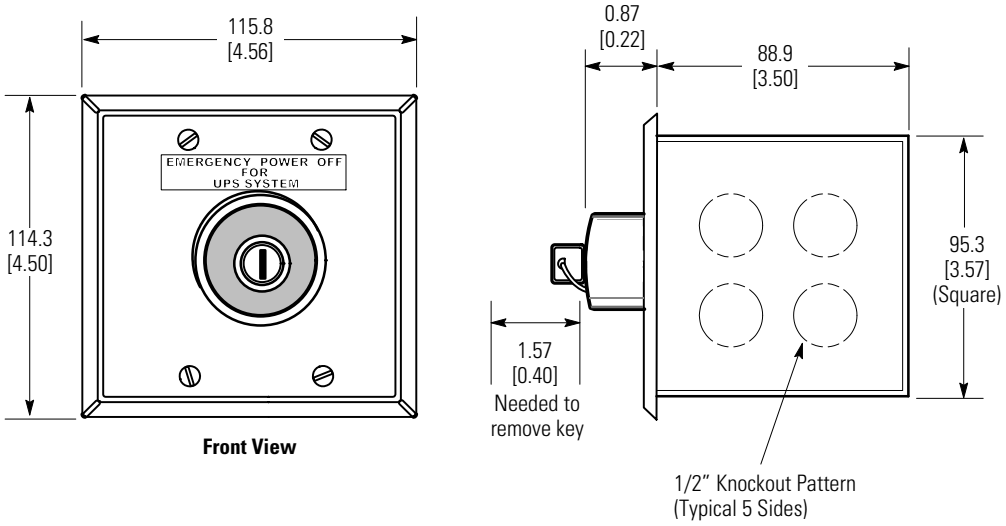


Dimensions are in millimeters [inches].

**Figure 3-7. Remote EPO Switch Dimensions**

### 3.2.3 UPS System Power Wiring Preparation

Read and understand the following notes while planning and performing the installation:

- Refer to national and local electrical codes for acceptable external wiring practices.
- To allow for future kVA upgrades, consider installing a derated UPS using wiring and external overcurrent protection breakers sized for a fully rated UPS.
- For external wiring, use 90°C copper or aluminum wire. Wire sizes listed in Table 3-4 and Table 3-5 are for copper wiring only. If wire is run in an ambient temperature greater than 30°C, higher temperature wire and/or larger size wire may be necessary. Wire sizes are based on using the specified breakers.
- Wire ampacities are chosen from Table 310-16 of the National Electrical Code® (NEC®). Specification is for copper wire with a 90°C rating.
- Material and labor for external wiring requirements are to be provided by designated personnel.
- If installing a maintenance bypass, a minimum of two separate feeds with upstream feeder breakers, or a single feed with two upstream feeder breakers, must be provided: one for the UPS or rectifier input breaker (RIB) (if installed) and one for the maintenance bypass input. DO NOT use a single feed or a single feeder breaker to supply both the UPS or RIB and the maintenance bypass. If a bypass input breaker (BIB) is installed in the maintenance bypass and a single-feed UPS is being installed, a single feed to the maintenance bypass is acceptable for supplying both the UPS and the bypass.
- The bypass feed into this equipment uses three or four wires. The rectifier feed into this equipment uses three wires. The phases must be symmetrical about ground (from a Wye source) for proper equipment operation.
- If the load requires a neutral, a bypass source neutral must be provided.
- DO NOT install both a source neutral and a bonding jumper. See Table 3-7 for neutral bonding jumper wire sizes. The bonding jumper must be copper wire.
- Eaton UPS systems are designed to operate with two optional ground schemes. Both configurations comply with international safety regulations (as seen on the UPS name plate).
  - 1. Internal reference generated through an earth reference. Ground current will be equal to or less than 5% of the unit rating. This takes the form of a UPS N bus to ground bond wire. This configuration is confirmed by reviewing the units CTO number.
  - 2. Internally generated reference which avoids ground current. By locating the center reference inside the three phase conductors, the relationship between the UPS source and the UPS output is maintained. This is an internal UPS function and requires no additional work on the part of the installer or user. This configuration is confirmed by reviewing the units CTO number.

**CAUTION**

SINGLE HIGH IMPEDANCE GROUND SOURCE - In North American installations, the neutral conductor from the high impedance ground source of supply CANNOT be used. DO NOT bond the inverter center point (E12) to ground: this is an internal UPS function and requires no additional work by the installer or user.

DUAL HIGH IMPEDANCE GROUND SOURCE - In North American installations, the neutral conductor from the high impedance ground source of supply CANNOT be used. DO NOT bond the inverter center point (E12) to ground: this is an internal UPS function and requires no additional work by the installer or user. Please contact the Eaton help desk listed in Chapter 1 for additional guidance regarding dual high impedance ground sources.

**CAUTION**

When selecting the most appropriate grounding scheme for your application, consider items such as:
Ground fault detector settings
Site specific specifications and requirements
Local codes and regulations

- The UPS cabinet is shipped with a debris shield covering the ventilation grill on top of the unit. Do not remove the debris shield until installation is complete. However, remove the shield before operating the UPS. Once the debris shield is removed, do not place objects on the ventilation grill.
- In a common battery system, single and multiple UPMs are powered from one common battery source. In a separate battery system, multiple UPMs are each powered from separate battery sources.
- UPSs in distributed bypass and parallel systems must use a separate battery system.
- On a UPS configured for separate rectifier inputs, all sources that feed the separate rectifier inputs must be derived from a common ground point.
- A Field Installed UPM (FI-UPM) is always designated as UPM 4.

If the power rating listed on the nameplate of the installed UPS is not found in the following tables, wire the UPS using the fully rated specifications. Otherwise, calculate the required wire, conduit, and breaker sizes using the following guidelines in addition to those already listed in paragraph 3.2.3:

- Select wire size according to the UPS nameplate.
- Do not use wire larger than the largest size listed in Table 3-4 through Table 3-6.
- Use terminal recommendations from Table 3-8 through Table 3-11.
- Size and number of conduits must not exceed those listed in Table 3-12.
- Select overcurrent protection input, battery, and output breakers according to the UPS nameplate rated for either 80% or 100%.
- Follow all applicable NEC and local codes.

For external wiring requirements, including the minimum AWG size of external wiring, see Table 3-4 for common battery system installations, Table 3-5 for separate battery system installations, or Table 3-6 for separate rectifier feed installations. Wire sizes listed are for copper wiring only.

**Table 3-4. Input/Output Ratings and External Wiring Requirements for the Power Xpert 9395-275/225, 9395-250/228 and 9395-275/275 – Common Battery**

| | | Units | Rating 50/60 Hz | | | | |
|---|---|---|---|---|---|---|---|
| **Basic Unit Rating** | | kVA<br>kW | 225<br>205 | 225<br>205 | 250<br>228 | 275<br>250 | 275<br>250 |
| **Input and Output Voltage** | | Volts | 400/400 | 480/480 | 480/480 | 400/400 | 480/480 |
| **AC Input to UPS Rectifier (0.98 Minimum pF)**<br>Full load current plus battery recharge current<br>(3) Phases, (1) Ground | **A** | Amps | 370 | 309 | 343 | 453 | 377 |
| Minimum Conductor Size<br>Number per Phase | | AWG or kcmil<br>(each) | 4/0<br>(2) | 2/0<br>(2) | 2/0<br>(2) | 2/0<br>(3) | 4/0<br>(2) |
| **AC Input to UPS Bypass (Four Wire)**<br>Full Load Current<br>(3) Phases, (1) Ground | **B** | Amps | 325 | 271 | 301 | 397 | 331 |
| Minimum Conductor Size<br>Number per Phase | | AWG or kcmil<br>(each) | 3/0<br>(2) | 2/0<br>(2) | 2/0<br>(2) | 4/0<br>(2) | 4/0<br>(2) |
| **AC Input to UPS Bypass (Five Wire)**<br>Full Load Current<br>(3) Phases, (1) Neutral, (1) Ground | **B** | Amps | 325 | 271 | 301 | 397 | 331 |
| Minimum Conductor Size<br>Number per Phase | | AWG or kcmil<br>(each) | 4/0<br>(2) | 3/0<br>(2) | 3/0<br>(2) | 300<br>(2) | 4/0<br>(2) |
| **DC Input from Each Battery Cabinet to UPS or Battery Disconnect**<br>(1) Positive, (1) Negative | **C** | Total Amps | 451 | 451 | 501 | 551 | 551 |
| Minimum Conductor Size<br>Number per Pole | | AWG or kcmil<br>(each) | 500<br>(1) | 500<br>(1) | 500<br>(1) | 500<br>(1) | 500<br>(1) |
| **DC Input from Battery Disconnect to UPS**<br>(1) Positive, (1) Negative | **C** | Total Amps | 451 | 451 | 501 | 551 | 551 |
| Minimum Conductor Size<br>Number per Pole | | AWG or kcmil<br>(each) | 4/0<br>(3) | 4/0<br>(3) | 4/0<br>(3) | 250<br>(3) | 250<br>(3) |
| **AC Output to Critical Load (Four Wire)**<br>Full Load Current<br>(3) Phases, (1) Ground | **D** | Amps | 325 | 271 | 301 | 397 | 331 |
| Minimum Conductor Size<br>Number per Phase | | AWG or kcmil<br>(each) | 3/0<br>(2) | 2/0<br>(2) | 2/0<br>(2) | 4/0<br>(2) | 4/0<br>(2) |

**Table 3-4 Input/Output Ratings and External Wiring Requirements for the Power Xpert 9395-275/225, 9395-250/228 and 9395-275/275 – Common Battery (continued)**

| | | Units | Rating 50/60 Hz | | | | |
|---|---|---|---|---|---|---|---|
| **Basic Unit Rating** | | kVA<br>kW | 225<br>205 | 225<br>205 | 250<br>228 | 275<br>250 | 275<br>250 |
| **Input and Output Voltage** | | Volts | 400/400 | 480/480 | 480/480 | 400/400 | 480/480 |
| **AC Output to Critical Load (Five Wire)**<br>Full Load Current<br>(3) Phases, (1) Neutral, (1) Ground | **D** | Amps | 325 | 271 | 301 | 397 | 331 |
| Minimum Conductor Size<br>Number per Phase | | AWG or kcmil<br>(each) | 4/0<br>(2) | 3/0<br>(2) | 3/0<br>(2) | 300<br>(2) | 4/0<br>(2) |

NOTE Callout letters **A**, **B**, **C**, and **D** map to Figure 6-5 or Figure 6-6 .

**Battery Conductor Sizing:** Eaton strongly recommends using the specified DC conductor size and quantity shown above for optimum system performance and battery run time.

**Battery Cable Routing Requirements**

**Conduit applications:**

* Each conduit must have a Positive, Negative, and Ground conductor.
* There must be an equal number of positive and negative conductors in a single conduit. Only one ground conductor is required in each conduit.

**Raceway applications:**

* Positive and negative battery cables must be run side by side in the raceway in an alternating pattern (+ - + - + - + -).
* There must be a ground cable running in the raceway with the battery cables.

**Table 3-5. Input/Output Ratings and External Wiring Requirements for the Power Xpert 9395-275/225, 9395-250/228 and 9395-275/275 – Separate Battery (only systems with a FI-UPM)**

| | | Units | Rating 50/60 Hz | | | | |
|---|---|---|---|---|---|---|---|
| **Basic Unit Rating** | | kVA<br>kW | 225<br>205 | 225<br>205 | 250<br>228 | 275<br>250 | 275<br>250 |
| **Input and Output Voltage** | | Volts | 400/400 | 480/480 | 480/480 | 400/400 | 480/480 |
| **AC Input to UPS Rectifier (0.98 Minimum pF)**<br>Full load current plus battery recharge current<br>(3) Phases, (1) Ground | **A** | Amps | 370 | 309 | 343 | 453 | 377 |
| Minimum Conductor Size<br>Number per Phase | | AWG or kcmil<br>(each) | 4/0<br>(2) | 2/0<br>(2) | 2/0<br>(2) | 2/0<br>(3) | 4/0<br>(2) |
| **AC Input to UPS Bypass (Four Wire)**<br>Full Load Current<br>(3) Phases, (1) Ground | **B** | Amps | 325 | 271 | 301 | 397 | 331 |
| Minimum Conductor Size<br>Number per Phase | | AWG or kcmil<br>(each) | 3/0<br>(2) | 2/0<br>(2) | 2/0<br>(2) | 4/0<br>(2) | 4/0<br>(2) |
| **AC Input to UPS Bypass (Five Wire)**<br>Full Load Current<br>(3) Phases, (1) Neutral, (1) Ground | **B** | Amps | 325 | 271 | 301 | 397 | 331 |
| Minimum Conductor Size<br>Number per Phase | | AWG or kcmil<br>(each) | 4/0<br>(2) | 3/0<br>(2) | 3/0<br>(2) | 300<br>(2) | 4/0<br>(2) |
| **DC Input from Each Battery Cabinet to Each UPS UPM or Each Battery Disconnect**<br>(1) Positive, (1) Negative | **C** | Total Amps | 451 | 451 | 501 | 551 | 551 |
| Minimum Conductor Size<br>Number per Pole | | AWG or kcmil<br>(each) | 500<br>(1) | 500<br>(1) | 500<br>(1) | 500<br>(1) | 500<br>(1) |

**Table 3-5 Input/Output Ratings and External Wiring Requirements for the Power Xpert 9395-275/225, 9395-250/228 and 9395-275/275 – Separate Battery (only systems with a FI-UPM) (continued)**

| | | | | | | | |
|---|---|---|---|---|---|---|---|
| **Basic Unit Rating** | | kVA<br>kW | 225<br>205 | 225<br>205 | 250<br>228 | 275<br>250 | 275<br>250 |
| **Input and Output Voltage** | | Volts | 400/400 | 480/480 | 480/480 | 400/400 | 480/480 |
| **DC Input from Each Battery Disconnect to Each UPS UPM**<br>(1) Positive, (1) Negative | **C** | Total Amps | 451 | 451 | 501 | 551 | 551 |
| Minimum Conductor Size<br>Number per Pole | | AWG or kcmil<br>(each) | 4/0<br>(3) | 4/0<br>(3) | 4/0<br>(3) | 250<br>(3) | 250<br>(3) |
| **AC Output to Critical Load (Four Wire)**<br>Full Load Current<br>(3) Phases, (1) Ground | **D** | Amps | 325 | 271 | 301 | 397 | 331 |
| Minimum Conductor Size<br>Number per Phase | | AWG or kcmil<br>(each) | 3/0<br>(2) | 2/0<br>(2) | 2/0<br>(2) | 4/0<br>(2) | 4/0<br>(2) |
| **AC Output to Critical Load (Five Wire)**<br>Full Load Current<br>(3) Phases, (1) Neutral, (1) Ground | **D** | Amps | 325 | 271 | 301 | 397 | 331 |
| Minimum Conductor Size<br>Number per Phase | | AWG or kcmil<br>(each) | 4/0<br>(2) | 3/0<br>(2) | 3/0<br>(2) | 300<br>(2) | 4/0<br>(2) |

NOTE Callout letters **A**, **B**, **C**, and **D** map to Figure 6-7. Callout letters **B**, **C**, and **D** map to Figure 6-8 .

**Battery Conductor Sizing:** Eaton strongly recommends using the specified DC conductor size and quantity shown above for optimum system performance and battery run time.

**Battery Cable Routing Requirements**

**Conduit applications:**

* Each conduit must have a Positive, Negative, and Ground conductor.
* There must be an equal number of positive and negative conductors in a single conduit. Only one ground conductor is required in each conduit.

**Raceway applications:**

* Positive and negative battery cables must be run side by side in the raceway in an alternating pattern (+ - + - + - + -).
* There must be a ground cable running in the raceway with the battery cables.

AC input to the UPS with separate rectifier inputs is wired as if each UPM is rated for 275 kVA (see Table 3-6). The bypass input, battery input, and output are wired the same as for a separate battery UPS (see Table 3-5).

**Table 3-6. Separate Rectifier Input UPM Ratings and External Wiring Requirements for the 9395-250/228 and 9395-275/275 – Separate Battery**

| | | **Units** | **Rating 50/60 Hz** | | |
|---|---|---|---|---|---|
| **Basic UPM Rating** | | kVA<br>kW | 250<br>228 | 275<br>250 | 275<br>250 |
| **Input Voltage** | | Volts | 480 | 400 | 480 |
| **AC Input to each UPM Rectifier (0.98 Minimum pF)**<br>Full load current plus battery recharge current<br>(3) Phases, (1) Ground | **A** | Amps | 343 | 453 | 377 |
| Minimum Conductor Size<br>Number per Phase | | AWG or kcmil<br>(each) | 4/0<br>(2) | 2/0<br>(3) | 4/0<br>(2) |

NOTE Callout letter **A** maps to Figure 6-8 .

**Table 3-7. Neutral Bonding Jumper Wire Size (Four Wire Only)**

| Basic Unit Rating | Units | Rating 50/60 Hz | | | | |
|---|---|---|---|---|---|---|
| | kVA<br>kW | 225<br>205 | 225<br>205 | 250<br>228 | 275<br>250 | 275<br>250 |
| **Input and Output Voltage** | Volts | 400/400 | 480/480 | 480/480 | 400/400 | 480/480 |
| **Neutral Bonding Jumper**<br>Minimum Conductor Size Number | AWG or kcmil (each) | 2<br>(1) | 3<br>(1) | 3<br>(1) | 2<br>(1) | 2<br>(1) |

For a UPS with common rectifier input terminals, E1 through E12 are 2-hole bus bar mountings for standard NEMA 2-hole barrel lugs. The power wiring connections for this equipment are rated at 90°C. See Table 3-8 for external power cable terminations, Table 3-9 for supplied external wiring terminal hardware, and Table 3-10 for recommended installation parts and tools not supplied by Eaton Corporation.

For a UPS with separate rectifier input terminals for the UPMs, E1 through E3 are pressure terminations, UL and CSA rated at 90°C. See Table 3-11 for power cable terminations.

Figure 4-5 and Figure 4-6 show the location of the power cable terminals inside the UPS.

**Table 3-8. UPS Cabinet Power Cable Terminations for the Power Xpert 9395-275/225, 9395-275/275, and 9395-250/228**

| Terminal Function | Terminal | Function | Bus Landing | Tightening Torque Nm (lb ft) | Bolt Size |
|---|---|---|---|---|---|
| AC Input to UPS Rectifier | E1 | Phase A | 4 – 2 bolt mounting | 76 (56) | M12 |
| | E2 | Phase B | 4 – 2 bolt mounting | 76 (56) | M12 |
| | E3 | Phase C | 4 – 2 bolt mounting | 76 (56) | M12 |
| AC Input to Bypass | E6 | Phase A | 4 – 2 bolt mounting | 76 (56) | M12 |
| | E7 | Phase B | 4 – 2 bolt mounting | 76 (56) | M12 |
| | E8 | Phase C | 4 – 2 bolt mounting | 76 (56) | M12 |
| AC Output to Critical Load | E9 | Phase A | 4 – 2 bolt mounting | 76 (56) | M12 |
| | E10 | Phase B | 4 – 2 bolt mounting | 76 (56) | M12 |
| | E11 | Phase C | 4 – 2 bolt mounting | 76 (56) | M12 |
| DC Input from Battery or Battery Disconnect to UPS – Common Battery | E4 | Battery (+) | 4 – 2 bolt mounting<br>8 – 2 bolt mounting (with FI-UPM) | 76 (56) | M12 |
| | E5 | Battery (-) | 4 – 2 bolt mounting<br>8 – 2 bolt mounting (with FI-UPM) | 76 (56) | M12 |
| DC Input from Battery or Battery Disconnect to UPS – Separate Battery (UPM 1) | E4 | Battery (+) | 4 – 2 bolt mounting | 76 (56) | M12 |
| | E5 | Battery (-) | 4 – 2 bolt mounting | 76 (56) | M12 |
| DC Input from Battery or Battery Disconnect to UPS – Separate Battery (UPM 4 FI-UPM) | E4 | Battery (+) | 4 – 2 bolt mounting | 76 (56) | M12 |
| | E5 | Battery (-) | 4 – 2 bolt mounting | 76 (56) | M12 |
| Input and Output Neutral | E12 | Neutral | 8 – 2 bolt mounting | 22 (16) | M10 |
| Customer Ground | Ground | Ground | 7 – 1 bolt mounting | 22 (16) | M10 |

NOTE Customer ground, sized in accordance with NEC Table 250.122, can be run in any conduit listed in Table 3-12 .

**Table 3-9. Supplied Terminal Hardware**

| Part | Size | Quantity | Terminals Used On | Eaton Part Number |
|---|---|---|---|---|
| Bolt, Grade 5 | M10 x 30 mm | 12 | Ground and Neutral | 180190078-088 |
| Bolt, Grade 5 | M12 x 45 mm | 26 | Rectifier Input, Bypass Input, Battery Input, and Output | 180190078-113 |
| Flat Washer | M10 | 12 | Ground and Neutral | 180500036-100 |
| Flat Washer | M12 | 52 | Rectifier Input, Bypass Input, Battery Input, and Output | 180500036-120 |
| Conical Washer | M10 | 12 | Ground and Neutral | 180500037-100 |
| Conical Washer | M12 | 26 | Rectifier Input, Bypass Input, Battery Input, and Output | 180500037-120 |
| Nut | M12 | 26 | Rectifier Input, Bypass Input, Battery Input, and Output | 180200001-07 |

**Table 3-10. Recommended Installation Parts and Tools (Not Supplied by Eaton)**

| Part | Size | Quantity | Manufacturer | Part Number | Notes |
|---|---|---|---|---|---|
| Long Barrel 2-Hole Lug | 2/0 AWG | As required | Thomas & Betts | 54862BE | |
| | 3/0 AWG | | Thomas & Betts | 54864BE | |
| | 4/0 AWG | | Thomas & Betts | 54866BE | |
| | 250 MCM | | Thomas & Betts | 54868BE | |
| | 300 MCM | | Thomas & Betts | 54870BE | |
| | 350 MCM | | Thomas & Betts | 54872BE | |
| | 400 MCM | | Thomas & Betts | 54874BE | |
| | 500 MCM | | Thomas & Betts | 54876BE | |
| Manual Hydraulic Crimp Tool | 14 Ton | 1 | Thomas & Betts | TBM14M | |
| Die Set | N/A | 1 | Thomas & Betts | 15506 | |

**Table 3-11. Separate Rectifier Input UPM Power Cable Terminations for the Power Xpert 9395-275/225, 9395-275/275, and 9395-250/228**

| Terminal Function | Terminal | Function | Size of Pressure Termination | Tightening Torque Nm (lb ft) | Type Screw |
|---|---|---|---|---|---|
| AC Input to each UPM Rectifier | E1 | Phase A | 2 - #6-250 kcmil | 42.4 (375) | 5/16″ Hex |
| | E2 | Phase B | 2 - #6-250 kcmil | 42.4 (375) | 5/16″ Hex |
| | E3 | Phase C | 2 - #6-250 kcmil | 42.4 (375) | 5/16″ Hex |

Conduit sizes were chosen from NEC Table 4, Electrical Metallic Tubing (EMT). See Table 3-12 for conduit requirements.

Per NEC article 300, 3(B)(1), all three-phase conductors must be run in the same conduit. Neutral and ground must be run in the same conduit as the phase conductors.

Conduit is sized to accommodate one neutral conductor the same size as the phase conductor and one ground conductor sized in accordance with NEC Table 250.122.

Conduit sizes listed are for copper wiring only.

**Table 3-12. Power Cable Conduit Requirements**

| UPS Model | Voltage | Terminal | Number of Wires in Conduit | Minimum Conduit Trade Size | Number of Conduits |
|---|---|---|---|---|---|
| Power Xpert 9395-250/228 | 480 Vac | AC Input to UPS Rectifier (A, B, C, Ground) | 4 | 2 | 2 |
| | | AC Input to UPS Rectifier (Separate Feed) (A, B, C, Ground) | 4 | 2 | 2 (Each UPM) |
| | | AC Input to Bypass and Output (Four Wire) (A, B, C, Ground) | 4 | 2 | 2 |
| | | AC Input to Bypass and Output (Five Wire) (A, B, C, Neutral, Ground) | 5 | 2-1/2 | 2 |
| Power Xpert 9395-275/225 | 400 Vac | AC Input to UPS Rectifier (A, B, C, Ground) | 4 | 2 | 2 |
| | | AC Input to UPS Rectifier (Separate Feed) (A, B, C, Ground) | 4 | 2 | 2 (Each UPM) |
| | | AC Input to Bypass and Output (Four Wire) (A, B, C, Ground) | 4 | 2 | 2 |
| | | AC Input to Bypass and Output (Five Wire) (A, B, C, Neutral, Ground) | 5 | 2-1/2 | 2 |
| | 480 Vac | AC Input to UPS Rectifier (A, B, C, Ground) | 4 | 2 | 2 |
| | | AC Input to UPS Rectifier (Separate Feed) (A, B, C, Ground) | 4 | 2 | 2 (Each UPM) |
| | | AC Input to Bypass and Output (Four Wire) (A, B, C, Ground) | 4 | 2 | 2 |
| | | AC Input to Bypass and Output (Five Wire) (A, B, C, Neutral, Ground) | 5 | 2-1/2 | 2 |
| Power Xpert 9395-275/275 | 400 Vac | AC Input to UPS Rectifier (A, B, C, Ground) | 4 | 2 | 3 |
| | | AC Input to UPS Rectifier (Separate Feed) (A, B, C, Ground) | 4 | 2 | 3 (Each UPM) |
| | | AC Input to Bypass and Output (Four Wire) (A, B, C, Ground) | 4 | 2 | 2 |
| | | AC Input to Bypass and Output (Five Wire) (A, B, C, Neutral, Ground) | 5 | 2-1/2 | 2 |
| | 480 Vac | AC Input to UPS Rectifier (A, B, C, Ground) | 4 | 2 | 2 |
| | | AC Input to UPS Rectifier (Separate Feed) (A, B, C, Ground) | 4 | 2 | 2 (Each UPM) |
| | | AC Input to Bypass and Output (Four Wire) (A, B, C, Ground) | 4 | 2 | 2 |
| | | AC Input to Bypass and Output (Five Wire) (A, B, C, Neutral, Ground) | 5 | 2-1/2 | 2 |
| All ratings | DC | Battery (Positive, Negative, Ground) | See Note | | |

NOTE Select conduit taking into consideration the DC input wire sizes listed in Table 3-4 or Table 3-5, the DC terminations listed in Table 3-8 , type of battery installation, and requirements from NEC Table 4, Electrical Metallic Tubing (EMT).

**Battery Cable Routing:** Refer to the notes at the bottom of Table 3-4 Input/Output Ratings and External Wiring Requirements…

.

External overcurrent protection and disconnect are not provided by this product, but are required by codes. Refer to Table 3-4 through Table 3-6 for wiring requirements. If an output lockable disconnect is required, it is to be supplied by the customer.

Table 3-13 lists the recommended rating for input circuit breakers.

Table 3-14 lists the recommended rating for input circuit breakers with separate rectifier inputs. A separate breaker is required for each UPM.

**Table 3-13. Recommended Input Circuit Breaker Ratings**

| UPS Model | Input Rating | | |
|---|---|---|---|
| | Load Rating | 400V | 480V |
| Power Xpert 9395-250/228 | 80% Rated | 500A | 400A |
| | 100% Rated | 400A | 350A |
| Power Xpert 9395-275/225 | 80% Rated | 500A | 400A |
| | 100% Rated | 400A | 350A |
| Power Xpert 9395-275/275 | 80% Rated | 600A | 500A |
| | 100% Rated | 500A | 400A |

**Table 3-14. Separate Rectifier Input Recommended Input Circuit Breaker Ratings**

| UPS Model | Input Rating for Each UPM | | |
|---|---|---|---|
| | Load Rating | 400V | 480V |
| Power Xpert 9395-250/228 | 80% Rated | 500A | 400A |
| | 100% Rated | 400A | 350A |
| Power Xpert 9395-275/225 | 80% Rated | 500A | 400A |
| | 100% Rated | 400A | 350A |
| Power Xpert 9395-275/275 | 80% Rated | 600A | 500A |
| | 100% Rated | 500A | 400A |

**CAUTION**

To reduce the risk of fire, connect only to a circuit provided with maximum input circuit breaker current ratings from Table 3-13 in accordance with NEC ANSI/NFPA 70.

The line-to-line unbalanced output capability of the UPS is limited only by the full load per phase current values for AC output to critical load shown in Table 3-4 or Table 3-5. The recommended line-to-line load unbalance is 50% or less.

Bypass and output overcurrent protection and bypass and output disconnect switches are to be provided by the customer. Module Output Breakers (MOBs) are to be provided by the customer. Table 3-15 lists the recommended rating for bypass, output, and MOB circuit breakers.

**Table 3-15. Recommended Bypass, Output, and MOB Circuit Breaker Ratings**

| UPS Model | Bypass, Output, and MOB Rating | | |
|---|---|---|---|
| | Load Rating | 400V | 480V |
| Power Xpert 9395-250/228 | 80% Rated | 450A | 400A |
| | 100% Rated | 350A | 300A |
| Power Xpert 9395-275/225 | 80% Rated | 450A | 350A |
| | 100% Rated | 350A | 300A |
| Power Xpert 9395-275/275 | 80% Rated | 500A | 450A |
| | 100% Rated | 400A | 350A |

There is no manual DC disconnect device within the UPS.

A battery disconnect switch is recommended, and may be required by NEC or local codes when batteries are remotely located. The battery disconnect switch should be installed between the battery and the UPS.

External DC input overcurrent protection and disconnect switch for the remote battery location is to be provided by the customer. Table 3-16 or Table 3-17 lists the maximum rating for continuous-duty rated circuit breakers satisfying the criteria for both. Recommended breaker size is based on a maximum full load discharge time less than 3 hours. For longer discharge times a larger breaker may be required.

**Table 3-16. Recommended DC Input Circuit Breaker Ratings**

| UPS Model | Input Rating | |
|---|---|---|
| | 400V | 480V |
| Power Xpert 9395-250/228 | 600A | 600A |
| Power Xpert 9395-275/225 | 600A | 600A |
| Power Xpert 9395-275/275 | 700A | 700A |

**Table 3-17. Recommended DC Input Battery Disconnect Ratings – Separate Battery**

| UPS Model | Input Rating (each UPM) | |
|---|---|---|
| | 400V | 480V |
| Power Xpert 9395-250/228 | 600A | 600A |
| Power Xpert 9395-275/225 | 600A | 600A |
| Power Xpert 9395-275/275 | 700A | 700A |

Battery voltage is computed at 2 volts per cell as defined by Article 480 of the NEC. Rated battery current is computed at 2 volts per cell.

The battery wiring used between the battery and the UPS should not allow a voltage drop of more than 1% of nominal DC voltage at rated battery current.

### 3.2.4 UPS System Interface Wiring Preparation

Control wiring for features and options should be connected at the customer interface terminal blocks located inside the UPS.

**WARNING**

Do not directly connect relay contacts to the mains related circuits. Reinforced insulation to the mains is required.

Read and understand the following notes while planning and performing the installation:

- Use Class 1 wiring methods (as defined by the NEC) for interface wiring from 30V to 600V. The wire should be rated at 600V, 1A minimum and 12 AWG maximum.
- Use Class 2 wiring methods (as defined by the NEC) for interface wiring up to 30V. The wire should be rated at 24V, 1A minimum.
- Use shielded twisted-pair wires for each input and return or common.
- All interface wiring and conduit is to be provided by the customer.
- When installing external interface wiring (for example, building alarm, relay output, battery breaker trip, and X-Slot) to the UPS interface terminals, conduit must be installed between each device and the UPS cabinet.
- Install the interface wiring in separate conduit from the power wiring.
- When installing internal interface wiring to X-Slot terminals, route the wiring through the internal opening in the X-Slot communication bay.
- All building alarm inputs or remote features require an isolated normally-open contact or switch (rated at 24 Vdc, 20 mA minimum) connected between the alarm input and common terminal. All control wiring and relay and switch contacts are customer-supplied.
- The building alarms can be programmed to display the alarm functional name.
- LAN drops for use with X-Slot connectivity cards must be provided by the customer.
- The UPS Battery Aux and 48 Vdc Shunt Trip signal wiring from the UPS must be connected to the DC source disconnect device.
- Battery Aux and 48 Vdc Shunt Trip wiring should be a minimum of 18 AWG.
- The REPO feature opens all contactors in the UPS cabinet and isolates power from your critical load. Local electrical codes may also require tripping upstream protective devices to the UPS.
- The REPO switch must be a latching-type switch not tied to any other circuits.
- A jumper wire must be connected between pins 1 and 2 on TB1, if the normally-closed REPO contact is not used.
- REPO wiring should be a minimum of 22 AWG and a maximum of 14 AWG.
- The REPO switch wiring must be in accordance with NEC Article 725 Class 2 requirements.
- The maximum distance between the REPO and the UPS cannot exceed 150 meters (500 feet).
- Alarm relay contacts have a maximum current rating of 5A and a switched voltage rating of 30 Vac and 28 Vdc.
- Alarm relay wiring should be a minimum of 22 AWG.

**CAUTION**

On all 9395 models that will be fed by a site generator at any time it is recommended to have an "On Generator" sensing input connected and proven functional. This allows the UPS to optimize its operation with the generator. This function includes reduced input current and battery current limits, slower walk-in to ease the load step on the generator initially, and HIGH ALERT mode for ESS and VMMS operation.

HIGH ALERT mode is desired because any loads with a leading power factor will not be seen by the generator. Rectifier operation will be much softer while on generator thereby increasing overall system stability.

### 3.2.5 Distributed Bypass Power Wiring Preparation

***NOTE*** *For full-rated operation of a Distributed Bypass System when in Bypass or ESS mode, the line frequency impedance of all conduction paths must be equal when assessed from the point where the Bypass Power Source connects to the System Switchgear to the point where the Common Load connects to the System Switchgear.*

Read and understand the following notes while planning and performing the installation:

- All distributed bypass UPS rectifier inputs must come from one source and all bypass input feeds must come from one source.
- All UPSs in the distributed bypass system must contain the same number of UPMs. Mixed UPS kVA ratings are not permitted.
- Distributed bypass UPS input wiring size requirements and output wiring size requirements from the UPSs to the tie cabinet or distribution panel are the same as listed in Table 3-4 and Table 3-5.
- If the load requires a neutral, a bypass source neutral must be provided.
- In the case of parallel Distributed Bypass configurations, wiring for the common system neutral reference will also be connected to E12 of each module and this common system neutral reference wiring will be routed to the output switchgear cabinet and connected to an isolated / ungrounded bus which is common with the wiring from the E12 terminal of all other paralleled modules of the Distributed Bypass system.
- DO NOT install both a source neutral and a bonding jumper. See Table 3-7 for neutral bonding jumper wire sizes. The bonding jumper must be copper wire.
- Eaton UPS systems are designed to operate with two optional ground schemes. Both configurations comply with international safety regulations (as seen on the UPS name plate).
  - 1. Internal reference generated through an earth reference. Ground current will be equal to or less than 5% of the unit rating. This takes the form of a UPS N bus to ground bond wire. This configuration is confirmed by reviewing the units CTO number.
  - 2. Internally generated reference which avoids ground current. By locating the center reference inside the three phase conductors, the relationship between the UPS source and the UPS output is maintained. This is an internal UPS function and requires no additional work on the part of the installer or user. This configuration is confirmed by reviewing the units CTO number.

**CAUTION**

SINGLE HIGH IMPEDANCE GROUND SOURCE - In North American installations, the neutral conductor from the high impedance ground source of supply CANNOT be used. DO NOT bond the inverter center point (E12) to ground: this is an internal UPS function and requires no additional work by the installer or user.

DUAL HIGH IMPEDANCE GROUND SOURCE - In North American installations, the neutral conductor from the high impedance ground source of supply CANNOT be used. DO NOT bond the inverter center point (E12) to ground: this is an internal UPS function and requires no additional work by the installer or user. Please contact the Eaton help desk listed in Chapter 1 for additional guidance regarding dual high impedance ground sources.

**CAUTION**

When selecting the most appropriate grounding scheme for your application, consider items such as:

Ground fault detector settings
Site specific specifications and requirements
Local codes and regulations

- MOBs with dual auxiliary contacts are to be provided by the customer. Table 3-15 lists the recommended rating for the MOBs.

  The tie cabinet must contain Module Output Breakers (MOBs) with dual auxiliary contacts for control of the system. Without dual auxiliary MOBs, UPMs are not allowed to go to bypass individually during servicing. All UPMs will go to bypass instead of the just the UPM needing service, decreasing critical load protection. With dual auxiliary MOBs, one UPM can be bypassed while the remaining UPMs support the load as long as the remaining UPMs have the capacity to do so.

## 3.3 Inspecting and Unpacking the UPS Cabinet

The UPS cabinet is palleted separately for shipping. The cabinet is shipped bolted to a wooden pallet (see Figure 3-8) and protected with outer protective packaging material.

**WARNING**

The UPS cabinet is heavy (see Table 3-1). If unpacking and unloading instructions are not closely followed, the cabinet may tip and cause serious injury.

**CAUTION**

To prevent damage to the wiring channel and wiring in the UPS cabinet base when lifting or moving the cabinet:

- Lift and move the cabinet using only the front or rear forklift slots.
- Verify that the forklift forks are in a horizontal position before inserting them into the forklift slots. DO NOT angle fork tips upward.
- Insert the forks all the way through the base. DO NOT insert forks partially into the base to move the cabinet.
- Forks may be partially inserted into the front or rear forklift slots for minor positioning if the forks are kept in a horizontal position with no upward angling.
- DO NOT use the forklift slots on the end of the cabinet to move the cabinet.
- End forklift slots may be used for minor positioning if the forks are kept in a horizontal position with no upward angling.

If these instructions are not followed, damage to the wiring channel and wiring will occur.

1. Carefully inspect the outer packaging for evidence of damage during transit.

**CAUTION**

Do not install a damaged cabinet. Report any damage to the carrier and contact an Eaton service representative immediately.

***NOTE*** *For the following step, verify that the forklift or pallet jack is rated to handle the weight of the cabinet (see Table 3-1 for cabinet weight).*

2. Use a forklift or pallet jack to move the packaged cabinet to the installation site, or as close as possible, before unpacking. If possible, move the cabinet using the pallet. Insert the forklift or pallet jack forks from the right side of the pallet (facing the cabinet), between the supports on the bottom of the pallet (see Figure 3-6 for the UPS cabinet center of gravity measurements). If the cabinet must be moved using the cabinet front or rear fork lift slots, see the caution statement at the beginning of this procedure.

**CAUTION**

Do not tilt the UPS cabinet more than 10° from vertical or the cabinet may tip over.

3. Set the pallet on a firm, level surface, allowing a minimum clearance of 3m (10 ft) on each side for removing the cabinet from the pallet.

***NOTE*** *The UPS cabinet is shipped with a debris shield covering the ventilation grill on top of the unit. Do not remove the debris shield until installation is complete.*

4. Remove the protective covering from the cabinet.
5. Remove the packing material, and discard or recycle in a responsible manner.
6. Inspect the contents for any evidence of physical damage, and compare each item with the Bill of Lading. If damage has occurred or shortages are evident, contact an Eaton service representative immediately to determine the extent of the damage and its impact on further installation.

***NOTE*** *While waiting for installation, protect the unpacked cabinet from moisture, dust, and other harmful contaminants. Failure to store and protect the UPS properly may void your warranty.*

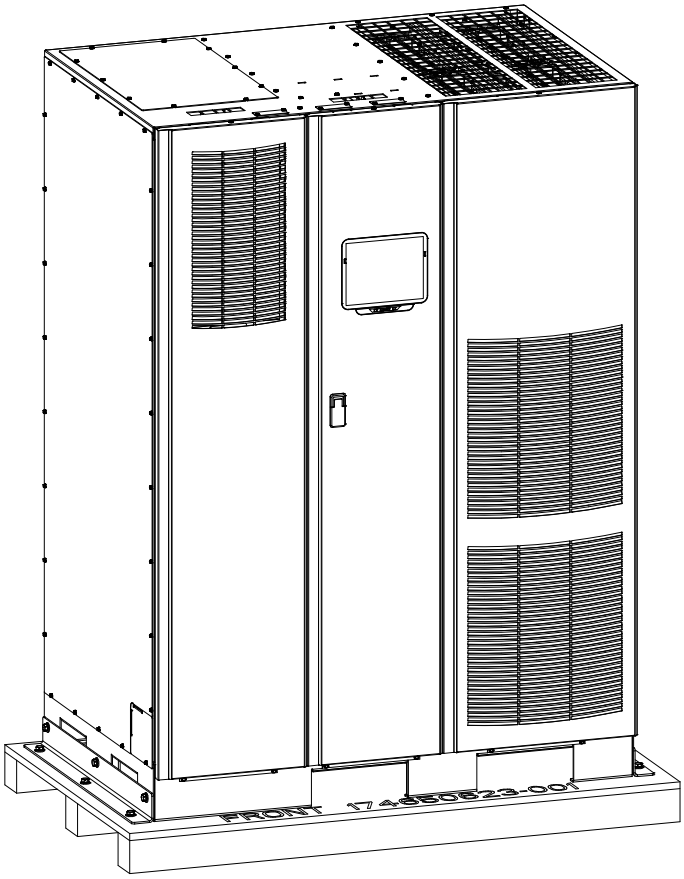


**Figure 3-8. UPS Cabinet as Shipped on Pallet**

This page intentionally left blank.

# Chapter 4 UPS System Installation

## 4.1 Preliminary Installation Information

**WARNING**

Installation should be performed only by qualified personnel.

Refer to the following while installing the UPS system:

- Chapter 3 for cabinet dimensions, equipment weight, wiring and terminal data, and installation notes.
- Do not tilt the cabinet more than ±10° during installation.
- Remove the conduit landing plates to add conduit landing holes as required. Plate material is 16 gauge steel (1.5 mm/0.06" thick).
- If perforated floor tiles are required for ventilation, place them in front of the UPS.

## 4.2 Unloading the UPS Cabinet from the Pallet and Mechanical Installation

The UPS cabinet is bolted to a wooden pallet supported by wood skids. To remove the pallet and mechanically install the UPS:

**WARNING**

The UPS cabinet is heavy (see Table 3-1). If unpacking and unloading instructions are not closely followed, the cabinet may tip and cause serious injury.

**CAUTION**

- Do not tilt cabinets more than 10° from vertical.
- Lift the cabinet only with a forklift or damage may occur.

To prevent damage to the wiring channel and wiring in the UPS cabinet base when lifting or moving the cabinet:

- Lift and move the cabinet using only the front or rear forklift slots.
- Verify that the forklift forks are in a horizontal position before inserting them into the forklift slots. DO NOT angle fork tips upward.
- Insert the forks all the way through the base. DO NOT insert forks partially into the base to move the cabinet.
- Forks may be partially inserted into the front or rear forklift slots for minor positioning if the forks are kept in a horizontal position with no upward angling.
- DO NOT use the forklift slots on the end of the cabinet to move the cabinet.
- End forklift slots may be used for minor positioning if the forks are kept in a horizontal position with no upward angling.

If these instructions are not followed, damage to the wiring channel and wiring will occur.

***NOTE*** *For the following steps, verify that the forklift or pallet jack is rated to handle the weight of the cabinet (see Table 3-1 for cabinet weight).*

1. If not already accomplished, use a forklift or pallet jack to move the cabinet to the installation area, or as close as possible, before unloading from the pallet. If possible, move the cabinet using the pallet. Insert the forklift or pallet jack forks from the right side of the pallet (facing the cabinet), between the supports on the bottom of the pallet (see Figure 3-6 for the UPS cabinet center of gravity measurements). If the cabinet must be moved using the cabinet front or rear fork lift slots, see the caution statement at the beginning of this procedure.
2. Remove the three bolts securing the left side shipping bracket to the cabinet and three bolts securing the bracket to the pallet (see Figure 4-1). Remove the left side shipping bracket. If installing the cabinet permanently, retain the shipping bracket and securing hardware for later use.
3. Remove the three bolts securing the right side shipping bracket to the cabinet and three bolts securing the bracket to the pallet (see Figure 4-2). Remove the right side shipping bracket. If installing the cabinet permanently, retain the shipping bracket and securing hardware for later use.
4. Using a forklift (see the caution statement at the beginning of this procedure), raise the UPS cabinet section until the cabinet bottom clears the pallet by approximately 3 mm (1/8”).
5. Pull the pallet from under the UPS cabinet. Discard or recycle the pallet in a responsible manner.
6. Using a forklift (see the caution statement at the beginning of this procedure), move the UPS cabinet to the final installed location.
7. Carefully lower the UPS cabinet until the cabinet base contacts the floor.
8. If permanently mounting the system, proceed to Step 9; otherwise, continue to Step 11.

***NOTE*** *DO NOT reinstall the left side shipping bracket, if installing a Field Installed UPM (FI-UPM).*

9. Using the retained hardware, reinstall the shipping brackets removed in Steps 2 and 3 to the left and right side of the UPS cabinet with the angle facing outward (see Figure 4-1 and Figure 4-2).
10. Secure the cabinet to the floor with customer-supplied hardware.
11. If installing a FI-UPM, proceed to paragraph 4.3; otherwise, proceed to Step 12.
12. If installing a battery system, proceed to paragraph 4.4; otherwise, proceed to Step 13.
13. If installing a tie cabinet or distribution panel for a distributed bypass system, proceed to paragraph 4.5; otherwise, proceed to paragraph 4.6.

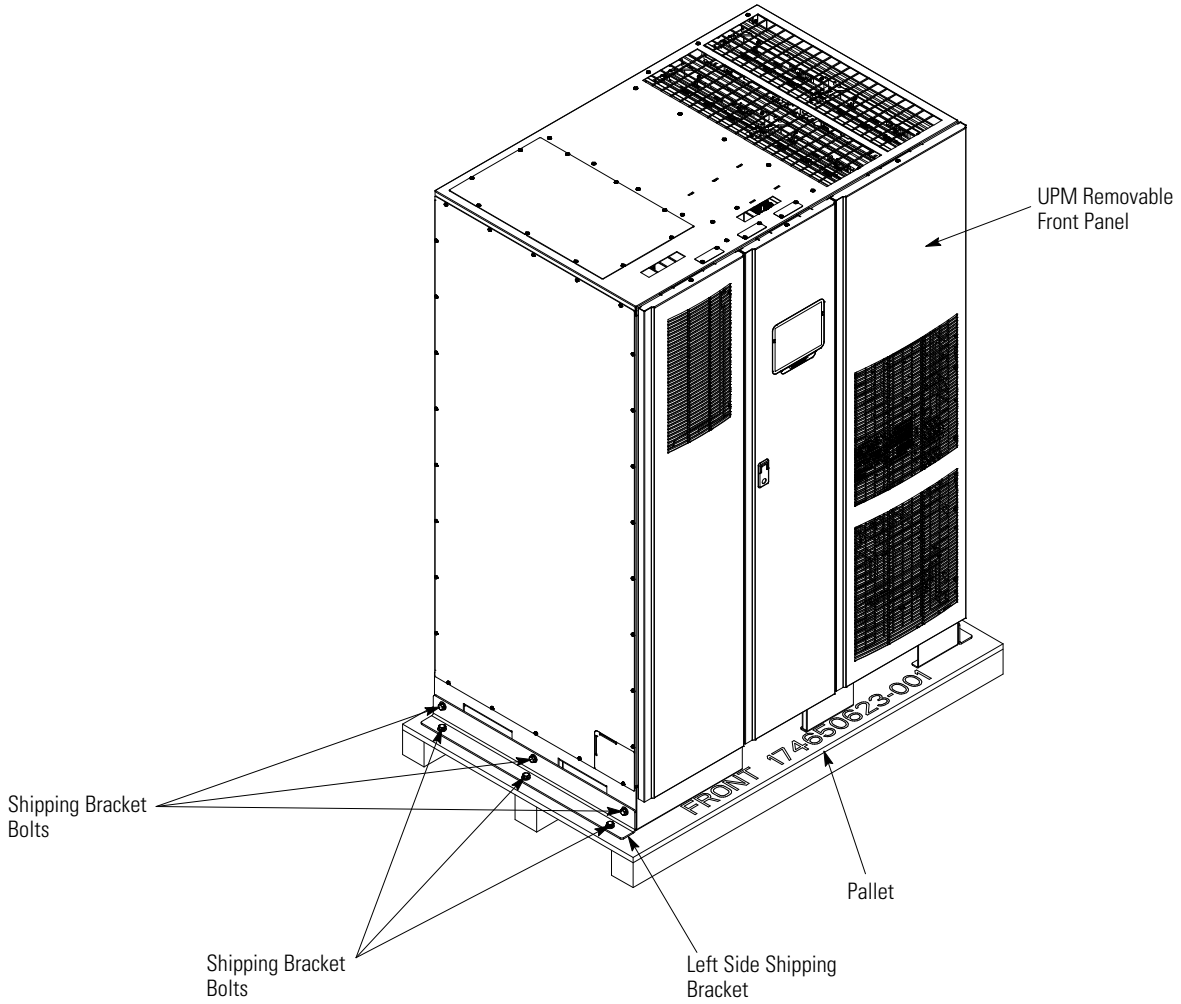


**Figure 4-1. Removing the Left Side Shipping Bracket**

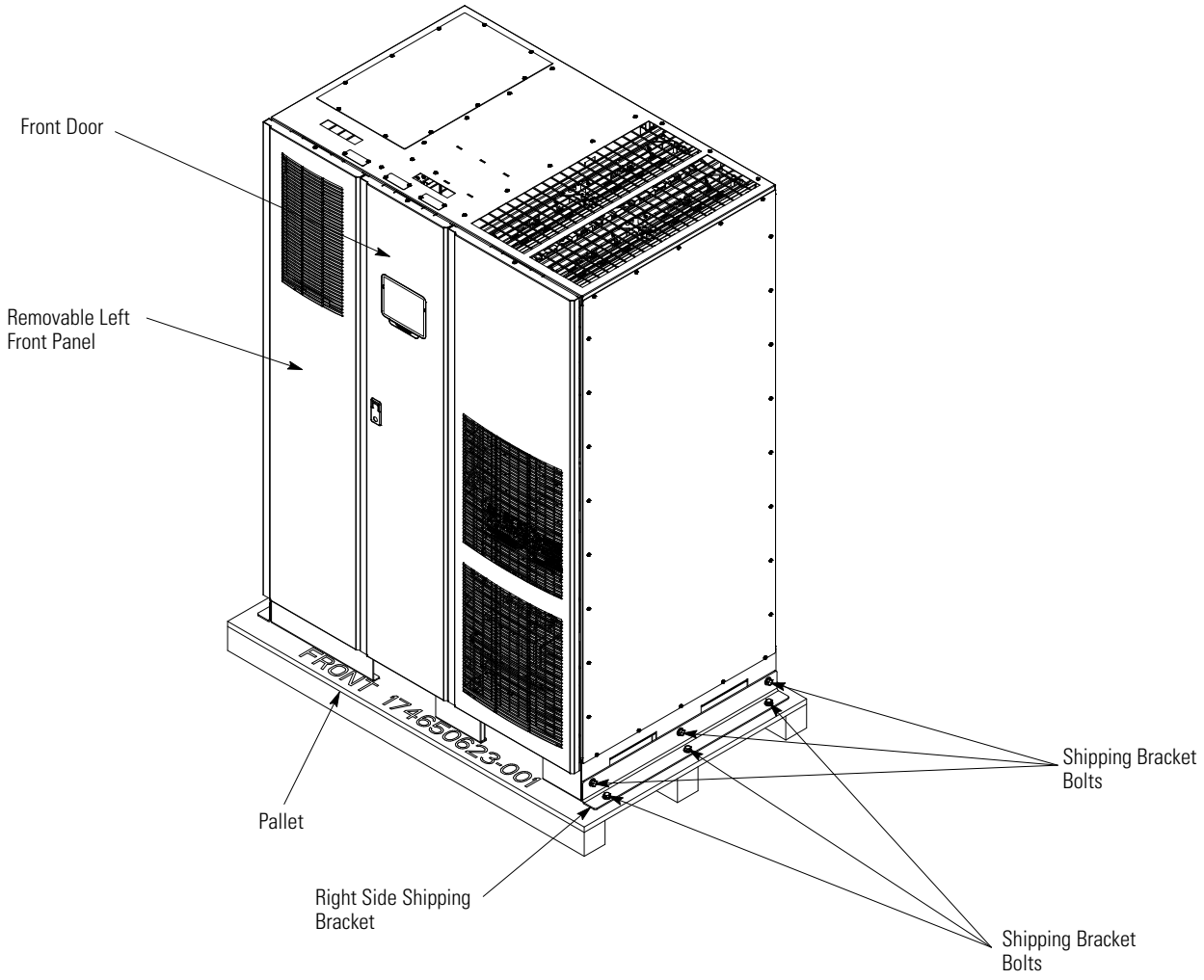


**Figure 4-2. Removing the Right Side Shipping Bracket**

## 4.3 Field Installed UPM Installation

If installing a FI-UPM, install the FI-UPM using the instructions in the *Power Xpert 9395 Field Installed UPM Mechanical Installation Manual*, listed in paragraph 1.8. After the FI-UPM is installed, proceed to paragraph 4.4 if installing a battery system; otherwise, proceed to paragraph 4.5.

## 4.4 Battery System Installation

If installing an Eaton battery cabinet, refer to the *Power Xpert 9395 Integrated Battery Cabinet (Model 1085 and 1085HR) Installation Manual*, listed in paragraph 1.8.

If installing a customer-supplied battery system, install the battery system according to the battery and battery system manufacturer's instructions and all applicable codes and regulations, including the NEC, Article 480.

After the battery system is installed, proceed to paragraph 4.5 if installing a distributed bypass tie cabinet; otherwise, proceed to paragraph 4.6 to complete the wiring of the UPS.

## 4.5 Distributed Bypass Tie Cabinet Installation

***NOTE*** *The tie cabinet must contain Module Output Breakers (MOBs) with dual auxiliary contacts for control of the system. Without dual auxiliary MOBs, UPMs are not allowed to go to bypass individually during servicing. All UPMs will go to bypass instead of only the UPM needing service, decreasing critical load protection. With dual auxiliary MOBs, one UPM can be bypassed while the remaining UPMs support the load as long as the remaining UPMs have the capacity to do so.*

If installing a distributed bypass system, install the customer-supplied tie cabinet or distribution panel according to the tie cabinet or distribution panel manufacturer's instructions and all applicable codes and regulations, including the NEC, Article 480. After the tie cabinet is installed, proceed to paragraph 4.6 to complete the wiring of the UPS.

In the case of parallel Distributed Bypass configurations, wiring for the common system neutral reference will also be connected to E12 of each module and this common system neutral reference wiring will be routed to the output switchgear cabinet and connected to an isolated / ungrounded bus which is common with the wiring from the E12 terminal of all other paralleled modules of the Distributed Bypass system.

## 4.6 Installing UPS External and Battery Power Wiring

***NOTE*** *The UPS cabinet is shipped with a debris shield covering the ventilation grill on top of the unit (see Figure 4-4). Do not remove the debris shield until installation is complete. However, remove the shield before operating the UPS. Once the debris shield is removed, do not place objects on the ventilation grill.*

***NOTE*** *Remove the UPS cabinet top or bottom conduit landing plate to drill or punch conduit holes (see Figure 4-4).*

***NOTE*** *If the load requires a neutral, a bypass source neutral must be provided.*

***NOTE*** *DO NOT install both a source neutral and a bonding jumper. See Table 3-7 for neutral bonding jumper wire sizes. Bonding jumper must be copper wire.*

**CAUTION**

HIGH IMPEDANCE GROUND SOURCES - If the supply source is a high impedance ground (IT) type, the input neutral conductor must be connected from the source of supply. If there is no output neutral connected to the UPS, the neutral-forming transformer kit may be used instead of pulling a neutral from the source. If the load requires a neutral, then an input neutral conductor must be pulled into the UPS. In no circumstances shall a neutral to ground bonding jumper be installed in the UPS.

Use the procedures in the following paragraphs to connect the external and battery power wiring.

### 4.6.1 2-Hole Barrel Lug Terminations to Bus Bar Installation

Paragraphs 4.6.2 and 4.6.3 require connecting input, output, and battery power wiring using 2-hole barrel lugs. See Figure 4-3 for the hardware sequence when installing the lugs to the bus bars. Tighten the nut to the torque value listed in Table 3-8.

***NOTE*** *Conical washers are special purpose washers that look similar to flat washers, except for a slight conical shape. When installing conical washers, the top of the dome should be next to the nut and the base of the washer should be against a flat surface such as a bus bar, flat washer, or large terminal.*

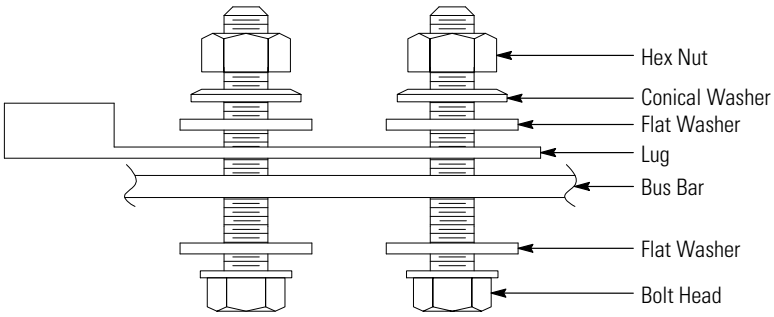


**Single Lug Installation**

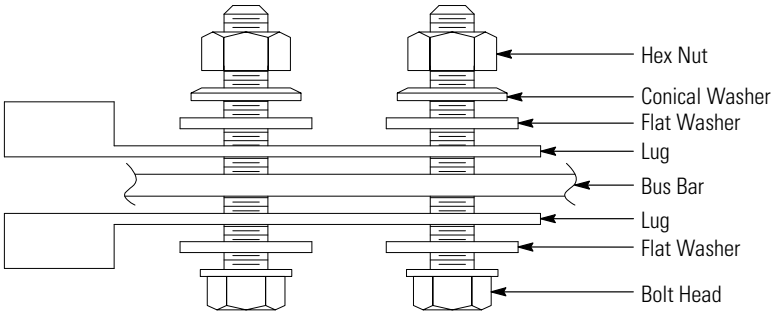


**Double Lug Installation**

**Figure 4-3. Typical Bus Bar Barrel Lug Mounting – Hardware Assembly Sequence**

### 4.6.2 External Power Wiring Installation

To install wiring to connections:

1. Remove one top screw and two bottom screws securing the UPS left front panel (see Figure 4-2). Lift the panel straight up to remove it from the panel hanger bracket at the top of the cabinet.

2. Remove the screws securing the internal safety shield panel and remove the panel to gain access to the input, output, and battery terminals. Retain the hardware for later use.

3. Route the input and output cables through either the top or bottom of the cabinet to the UPS terminals. See Figure 4-4 for wiring access information and Figure 4-5 and Figure 4-6 for common rectifier feed terminal locations or Figure 4-7 through Figure 4-9 for separate rectifier feed terminal locations.

   **Top Access Wiring.** Remove the top conduit plate from the top of the UPS. Identify all conduit requirements and mark their location. Drill and punch all conduit holes in the top conduit plate prior to mounting on the UPS. Install the conduit plate and install all conduit runs into the plate. Pull the wiring through the conduit into the wiring area.

   **Bottom Access Wiring.** Remove the bottom conduit plate from the inside bottom of the UPS. Identify all conduit requirements and mark their location. Drill and punch all conduit holes in the bottom conduit plate prior to mounting on the UPS. Install the conduit plate and install all conduit runs into the plate. Pull the wiring through conduit into the wiring area.

4. Locate the external wiring terminal hardware kit packed on the bottom left side of the ISBM section.

5. If installing a UPS with separate rectifier feeds, proceed to Step 6; otherwise, proceed to Step 8.

***NOTE*** *On a UPS that is configured for separate rectifier inputs, all sources that feed the separate rectifier inputs must be derived from a common ground point.*

6. Connect phase A, B, and C rectifier input power wiring from the utility source to each UPM rectifier input terminal block in the UPS cabinet. See paragraph 3.2.3, Table 3-6, and Table 3-11 for wiring and termination requirements.

7. Proceed to Step 10.

8. Using hardware from the external wiring terminal hardware kit (see Table 3-9), connect phase A, B, and C rectifier input power wiring from the utility source to the rectifier input terminals in the UPS cabinet. See paragraph 3.2.3 for wiring and termination requirements.

9. Using hardware from the external wiring terminal hardware kit (see Table 3-9), connect phase A, B, and C, and Neutral (if required) bypass input power wiring from the utility source to the bypass input terminals and neutral terminals in the UPS cabinet. See paragraph 3.2.3 for wiring and termination requirements.

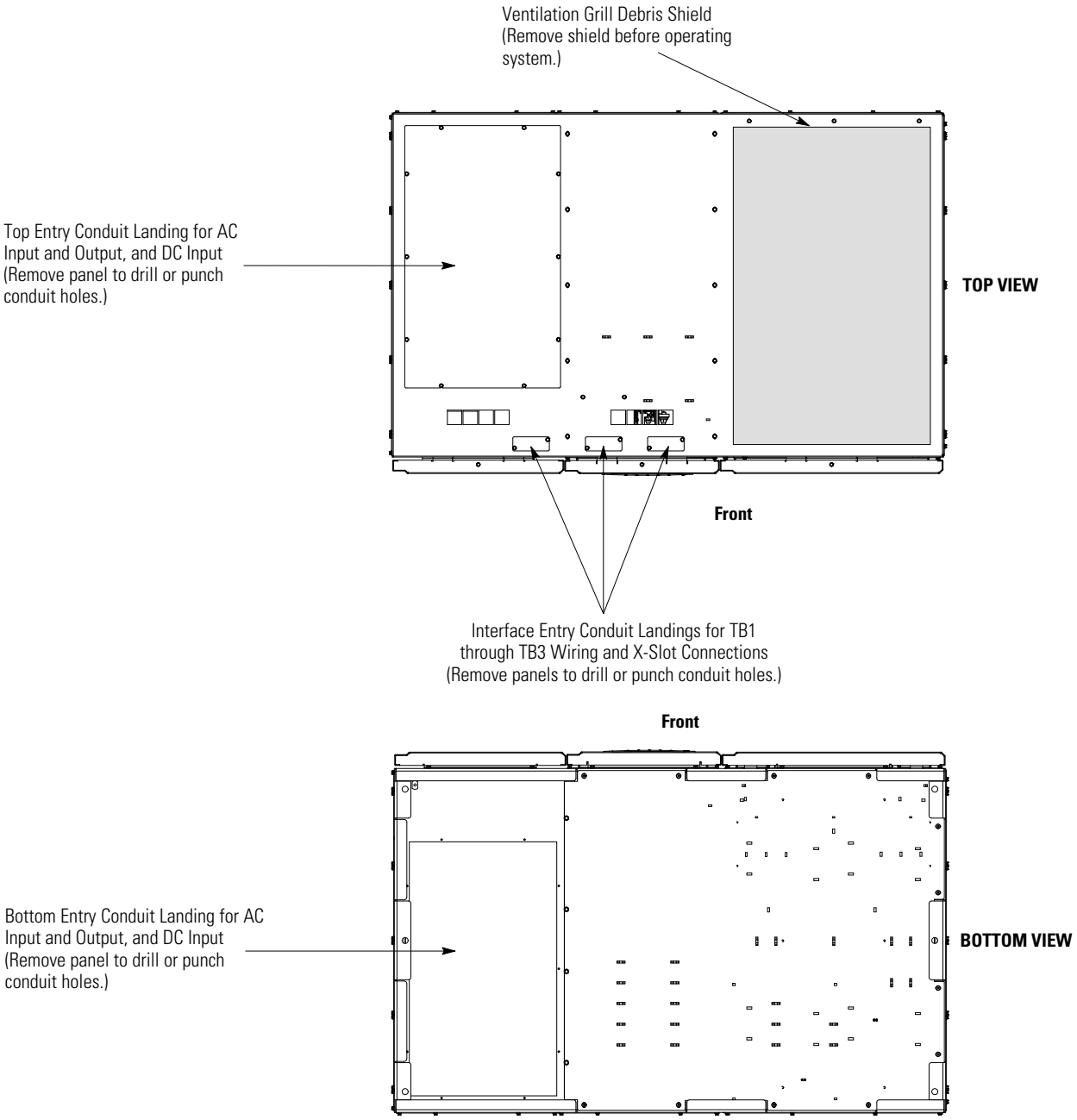


**Figure 4-4. Conduit and Wire Entry Locations**

**10.** If wiring a distributed bypass system, proceed to Step 11; otherwise, proceed to Step 13.

**11.** Using hardware from the external wiring terminal hardware kit (see Table 3-9), connect phase A, B, and C, and Neutral power wiring from the output and neutral terminals of each UPS unit to the customer-supplied tie cabinet or load distribution panel. See paragraph 3.2.3 for wiring and termination requirements.

**12.** Proceed to paragraph 4.6.3.

13. Using hardware from the external wiring terminal hardware kit (see Table 3-9), connect phase A, B, and C, and Neutral (if required) power wiring from output terminals and neutral terminals to the critical load. See paragraph 3.2.3 for wiring and termination requirements.

14. Proceed to paragraph 4.6.3.

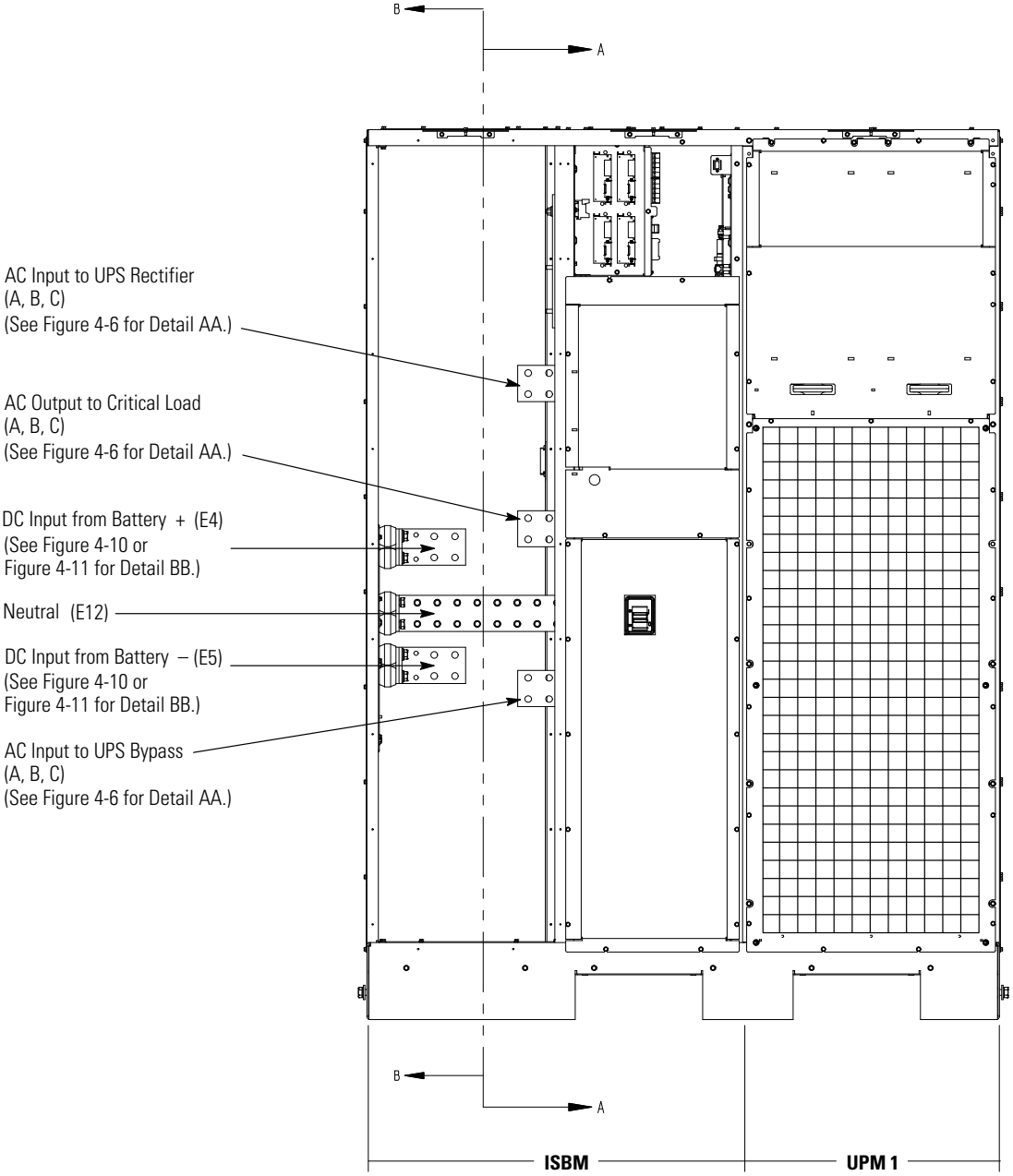


**Figure 4-5. UPS Power Terminal Locations – Common Rectifier Feed**

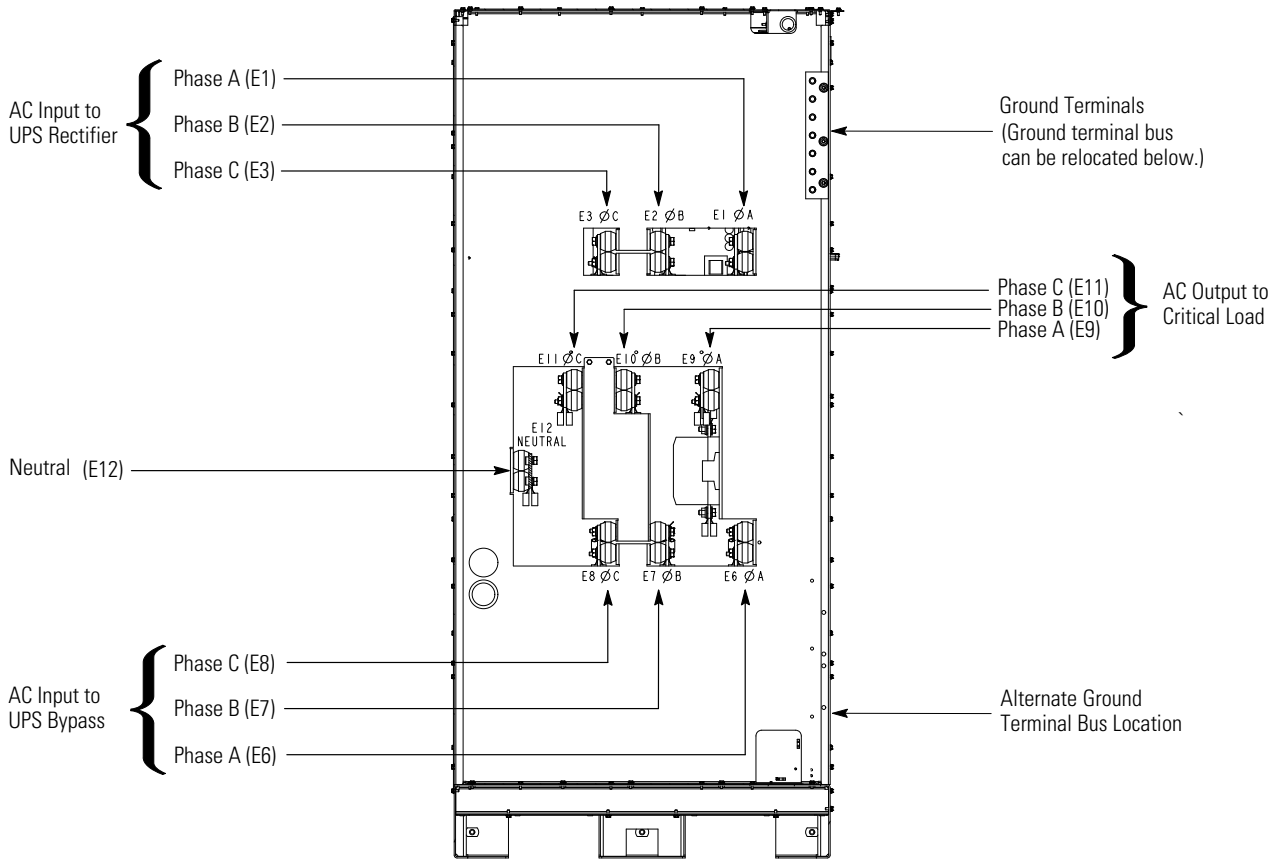


**Figure 4-6. UPS Power Terminal Detail AA – Common Rectifier Feed**

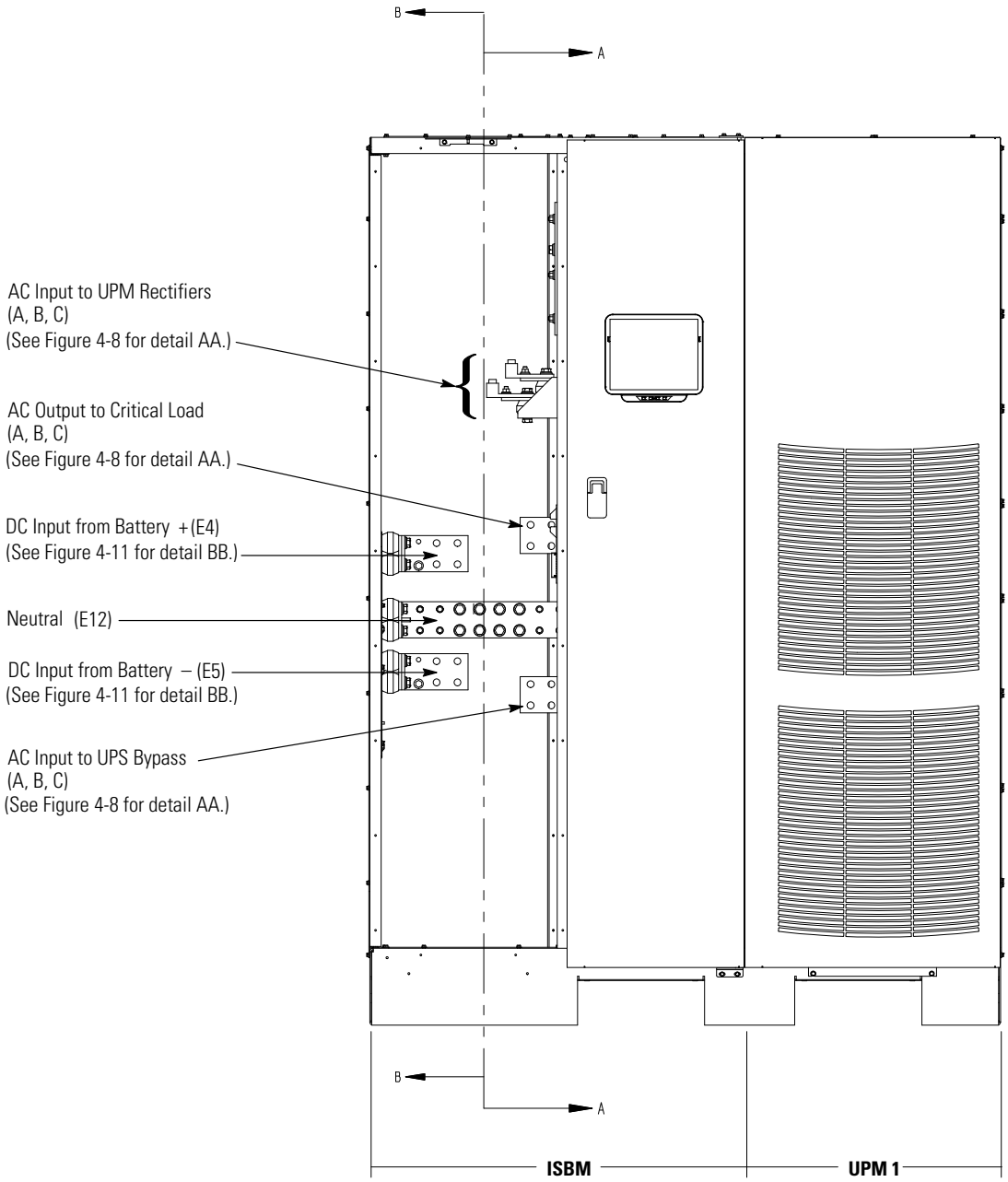


**Figure 4-7. UPS Power Terminal Locations – Separate Rectifier Feed**

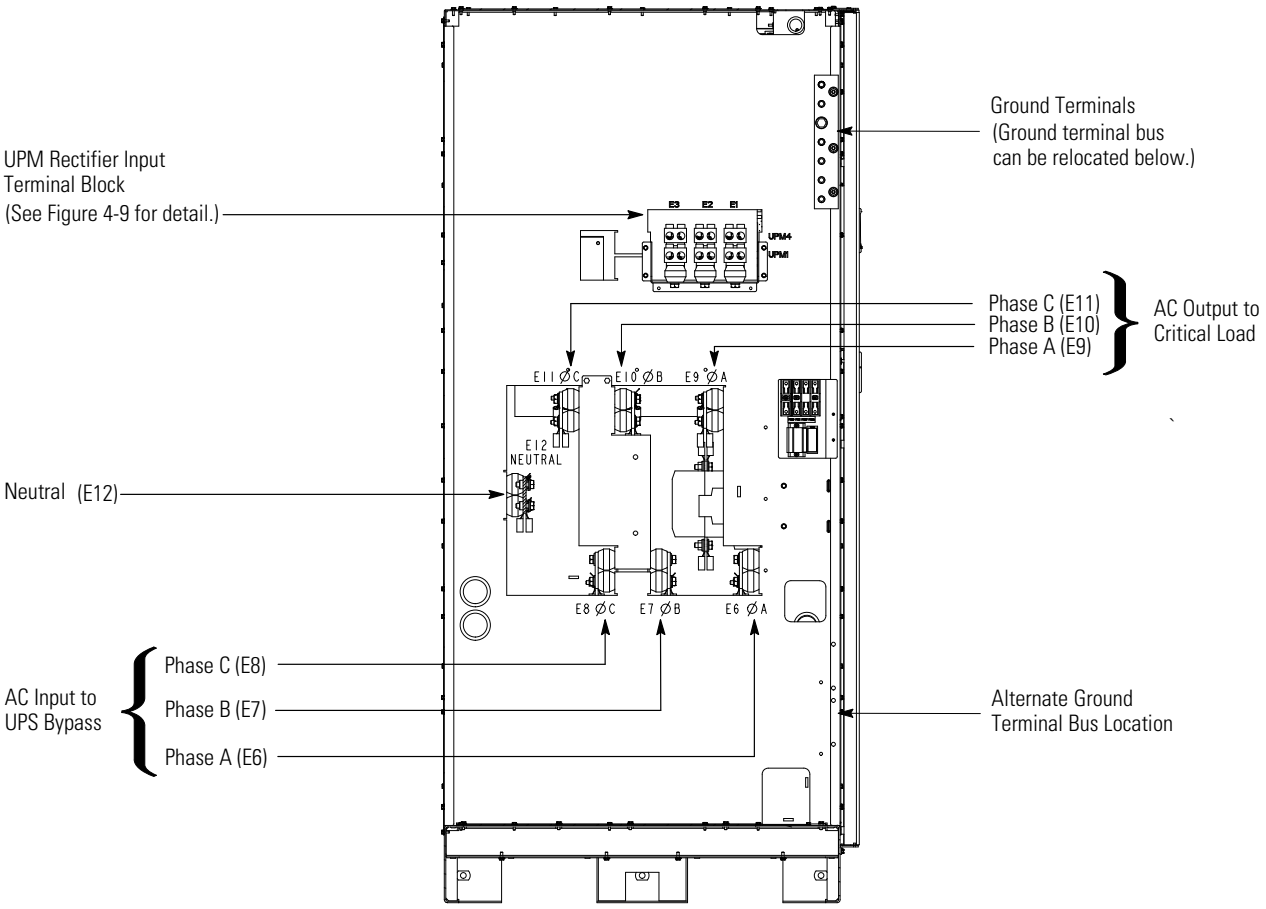


**Figure 4-8. UPS Power Terminal Detail AA – Separate Rectifier Feed**

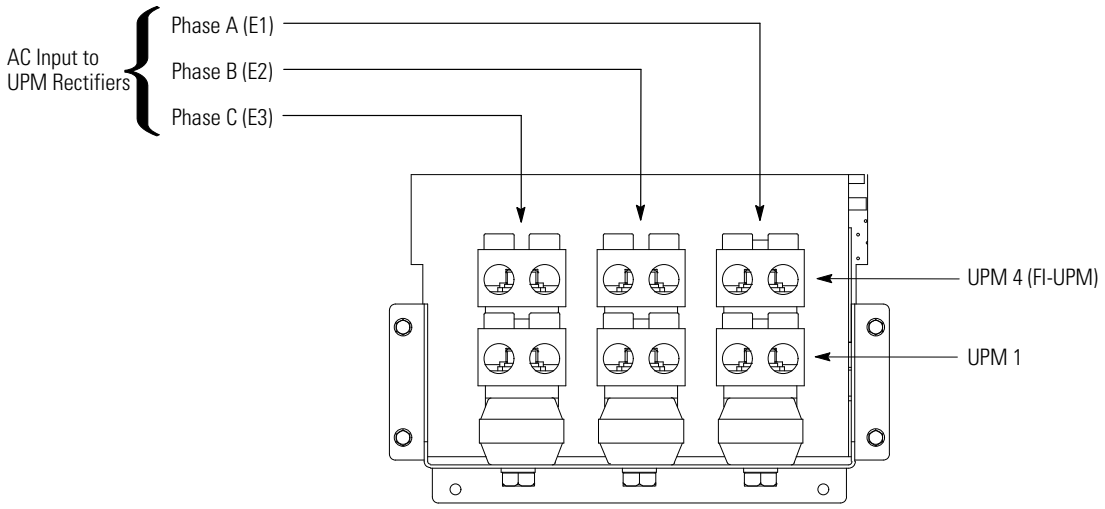


**Figure 4-9. UPM Rectifier Input Power Terminal Block Detail**

### 4.6.3 Battery Power Wiring

**CAUTION**

When sizing the battery system, do not exceed the internal battery charger capabilities. See Chapter 10, "Product Specifications," for maximum battery charger currents.

To install wiring to connections:

***NOTE*** *An installed FI-UPM is always designated as UPM 4.*

***NOTE*** ***Battery Cable Routing Requirements using Conduit:***
** Each conduit must have a Positive, Negative, and Ground conductor*
** There must be an equal number of positive and negative conductors in a single conduit. Only one ground conductor is required in each conduit.*
***Battery Cable Routing Requirements using Raceway:***
** Positive and negative battery cables must be run side by side in the raceway in an alternating pattern (+ - + - + - + -).*
** There must be a ground cable running in the raceway with the battery cables.*

1. If using an Eaton battery cabinet, proceed to Step 2; otherwise, proceed to Step 4.
2. Route and connect the battery cables between the UPS and battery cabinet or battery disconnect according to the instructions in the *Power Xpert 9395 Integrated Battery Cabinet (Model 1085 and 1085HR) Installation Manual*, listed in paragraph 1.8. See Figure 4-4 and Figure 4-5 for wiring access information and terminal locations.
3. Proceed to Step 5.
4. Route and connect the battery cables between the UPS and battery system or battery disconnect. See Figure 4-4 and Figure 4-5 for wiring access information and terminal locations.
5. If wiring the UPS for a common battery, proceed to Step 6; if wiring for a separate battery, proceed to Step 8.
6. Connect the positive, negative, and ground DC power wiring from the battery cabinet or disconnect to the UPS cabinet battery and ground terminals. Use both sets of terminals shown in Figure 4-10 as needed. See paragraph 3.2.3 for wiring and termination requirements.
7. Proceed to Step 9.
8. Connect the positive, negative, and ground DC power wiring from the battery cabinets or disconnects to the UPS cabinet battery and ground terminals. Use one set of terminals for each UPM as shown in Figure 4-11. See paragraph 3.2.3 for wiring and termination requirements.
9. After wiring the UPS system to the facility power and critical load, be sure to ground the system according to local and/or national electrical wiring codes.
10. If wiring interface connections, proceed to paragraph 4.7; otherwise, proceed to Step 11.
11. When all wiring is complete, reinstall the safety shield panel removed in paragraph 4.6.2, Step 2. Secure with the retained hardware.

**12.** Reinstall the left front panel removed in paragraph 4.6.2, Step 1 and secure with the retained hardware.

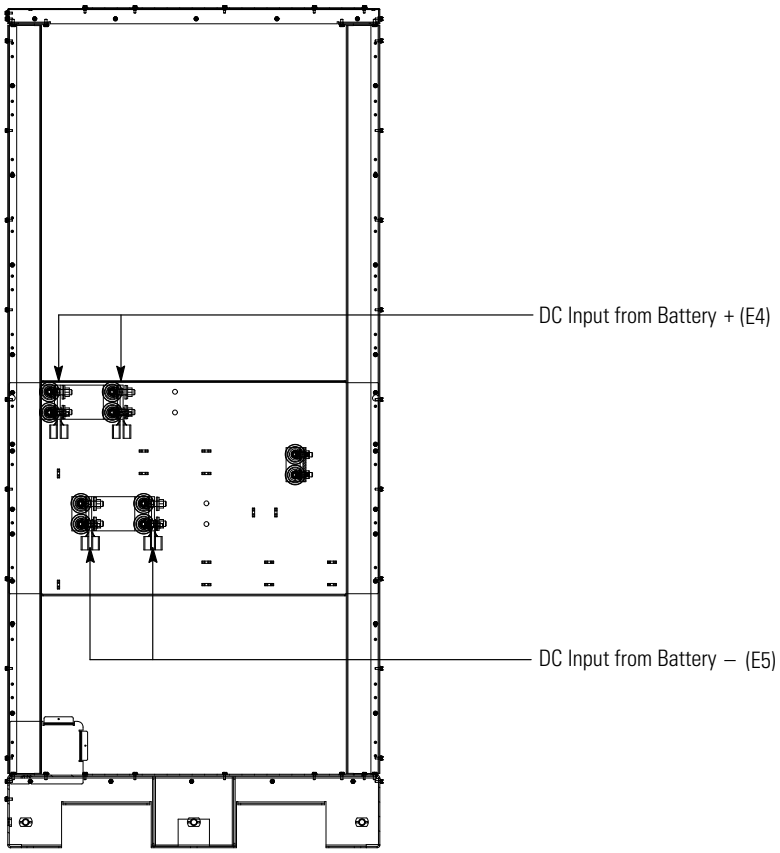


**Figure 4-10. UPS Power Terminal Detail BB – Common Battery**

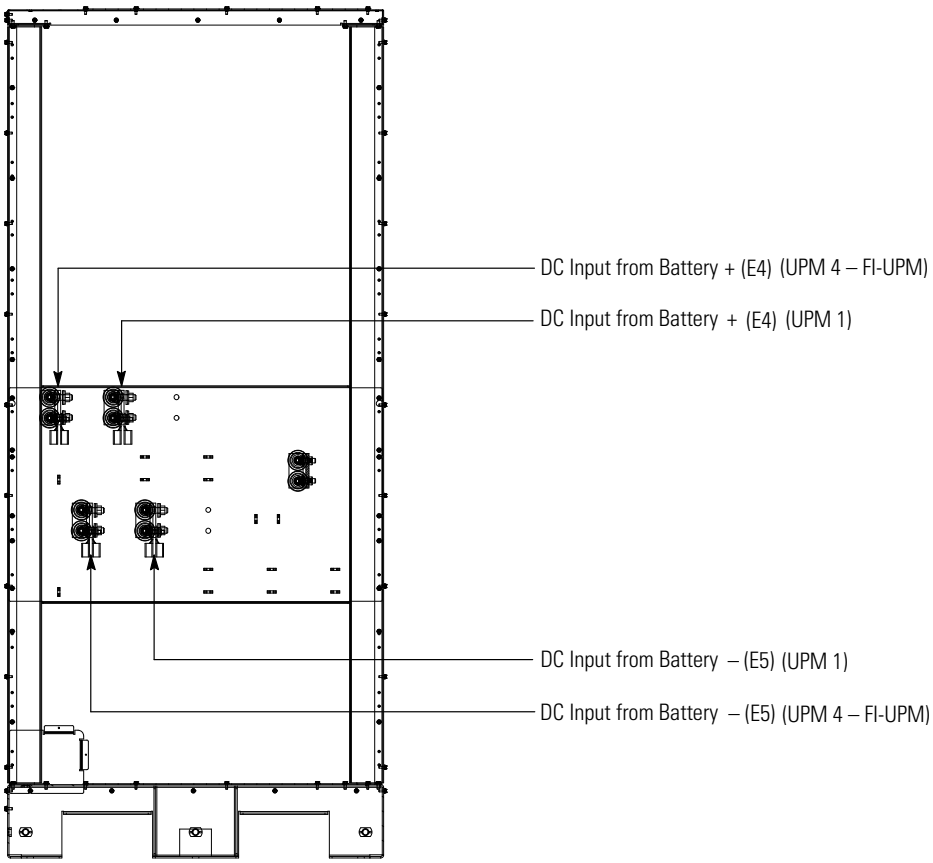


**Figure 4-11. UPS Power Terminal Detail BB – Separate Battery**

## 4.7 Installing Interface Connections

**WARNING**

Hazardous voltages are present near the user interface terminal area if the UPS is not totally disconnected.

Use the procedures in the following paragraphs to connect the TB1, TB1 Battery, TB2, and TB3 interface connections.

### 4.7.1 TB1, TB2, and TB3 Connections (Other than TB1 Battery Interface Connections)

***NOTE*** *When installing interface wiring for TB1, TB2, and TB3 connections, conduit must be installed between each device and the UPS cabinet.*

***NOTE*** *Interface wiring must be installed from the top of the UPS cabinet.*

To install wiring to connections:

1. Verify the UPS system is turned off and all power sources are removed. See Chapter 7, "UPS Operating Instructions," for shutdown instructions.
2. Unfasten the front door latch and swing the door open (see Figure 4-2).
3. Remove the door. Remove the retaining screw located inside the door at the bottom hinge pivot point, then lift the door off. Retain the hardware for later use.

4. If installing interface wiring through the left interface entry conduit landing, proceed to Step 5; otherwise, proceed to Step 7.

5. If not already accomplished, remove one top screw and two bottom screws securing the UPS left front panel (see Figure 4-2). Lift the panel straight up to remove it from the panel hanger bracket at the top of the cabinet.

6. Remove the screws securing the internal safety shield panel and remove the panel. Retain the hardware for later use.

7. Terminal block TB3 is accessible on the left side of the X-Slot communication bay. To gain access to terminal blocks TB1 and TB2 and the interface entry conduit landing plates, loosen the screws securing the small top internal safety shield panel and remove the panel. This panel is to the right of the X-Slot communication bay (see Figure 4-12).

8. Remove the UPS cabinet top interface entry conduit landing plates to drill or punch holes (see Figure 4-4).

9. Reinstall the interface entry plates and install the conduit.

**WARNING**

Do not directly connect relay contacts to the mains related circuits. Reinforced insulation to the mains is required.

10. To locate the appropriate terminals and review the wiring and termination requirements, see paragraph 3.2.4, Table 4-1, and Figure 4-12 through Figure 4-15.

11. Route and connect the wiring.

12. If wiring TB1 battery interface connections, proceed to paragraph 4.7.2; if wiring the X-Slot connections only, proceed to paragraph 4.7.3; otherwise, proceed to Step 13.

13. Reinstall the small top internal safety shield panel and secure with the cabinet mounted screws.

14. Reinstall the front door removed in Step 3 and secure with the retained hardware.

15. Close the front door and secure the latch.

16. If removed, reinstall the safety shield panel removed in Step 6. Secure with the retained hardware.

17. If removed, reinstall the left front panel removed in Step 5 and secure with the retained hardware.

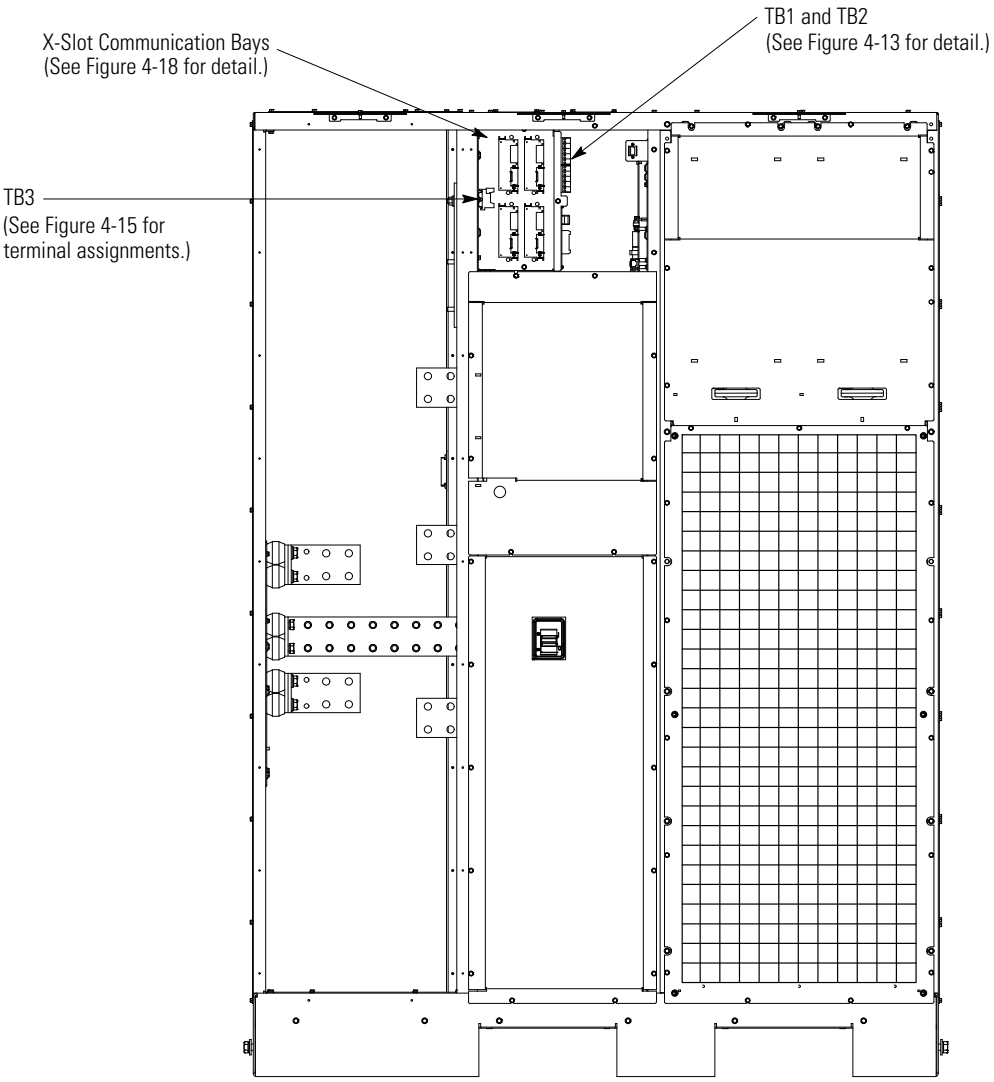


**Figure 4-12. Interface Terminal Locations**

**Table 4-1. TB1, TB2, and TB3 Interface Connections**

| Terminal TB1 | Name | Description |
|---|---|---|
| 1 | REPO NC | Input: Normally-closed dry contact used to activate UPS EPO from a remote switch. |
| 2 | REPO Return | |
| 3 | REPO NO | Input: Normally-open dry contact used to activate UPS EPO from a remote switch. |
| 4 | REPO Return | |
| 5 | Battery Aux | Input: Normally-open contact used to indicate when UPS battery breaker is open or closed. |
| 6 | Battery Aux Common | |
| 7 | 48 Vdc Battery Shunt Trip + | Output: Contacts used to open battery breaker or disconnect. |
| 8 | 48 Vdc Battery Shunt Trip – | |
| 9 | Output Contactor K3 NC Aux | Output: Normally-closed contact opens when output contactor closes. |
| 10 | Output Contactor K3 NC Aux Common | |
| **Terminal TB2** | **Name** | **Description** |
| 1 | Pull Chain | Output: Backup control for parallel operation. |
| 2 | Pull Chain Common | |
| 3 | Alarm Relay NC | Output: General purpose normally-closed (NC) relay contact. |
| 4 | Alarm Relay Common | |
| 5 | Alarm Relay NO | Output: General purpose normally-open (NO) relay contact. |
| 6 | Alarm Relay Common | |
| 7 | Not Used | |
| 8 | Not Used | |
| 9 | Not Used | |
| 10 | Not Used | |
| **Terminal TB3** | **Name** | **Description** |
| 1 | Building Alarm 1 | Input: Programmable UPS alarm, activated by a remote dry contact closure. |
| 2 | Building Alarm 1 Return | |
| 3 | Building Alarm 2 | Input: Programmable UPS alarm, activated by a remote dry contact closure. |
| 4 | Building Alarm 2 Return | |
| 5 | Building Alarm 3<br>Default: Charger Off | Input: Programmable UPS alarm, activated by a remote dry contact closure. Default function set for charger off. |
| 6 | Building Alarm 3 Return | |
| 7 | Building Alarm 4<br>Default: On Generator | Input: Programmable UPS alarm, activated by a remote dry contact closure. Default function set for on generator. |
| 8 | Building Alarm 4 Return | |
| 9 | Building Alarm 5<br>Default: Maintenance Bypass | Input: Programmable UPS alarm, activated by a remote dry contact closure. Default function set for maintenance bypass. |
| 10 | Building Alarm 5 Return | |

NOTE "Return" indicates connection to electronics circuit ground. "Common" indicates connection to common side of isolated relay contact.

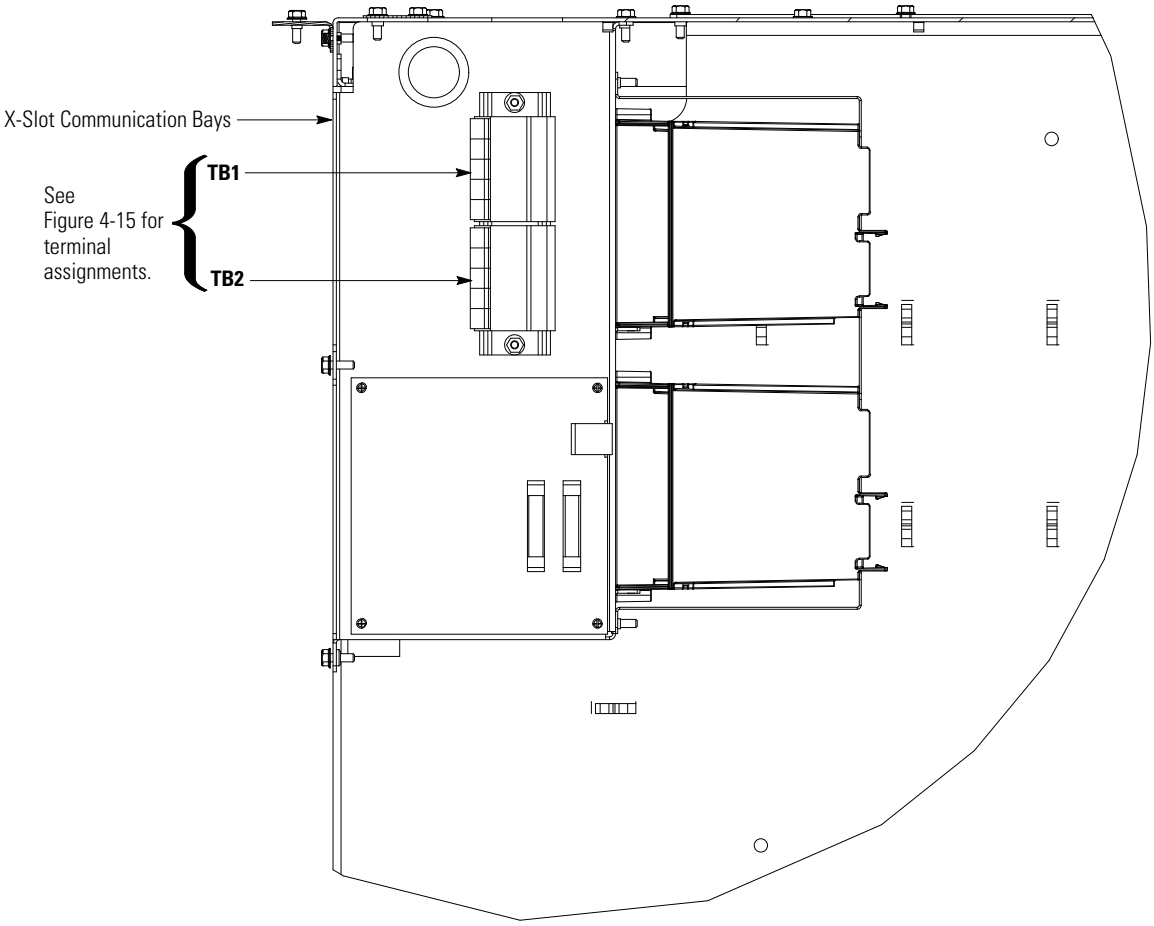


**Figure 4-13. Interface Terminal Detail**

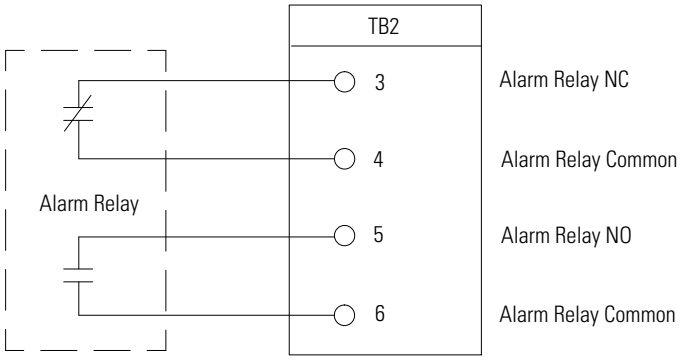


**NOTE** *Alarm relay contacts have a maximum current rating of 5A and a switched voltage rating of 30 Vac and 28 Vdc.*
**NOTE** *Alarm relay normally-open and normally-closed return terminals are separated on the terminal board but are electrically in common.*
**NOTE** *Do not directly connect relay contacts to the mains related circuits. Reinforced insulation to the mains is required.*
**NOTE** *Alarm relay wiring should be a minimum of 22 AWG.*

**Figure 4-14. Typical Alarm Relay Connection**

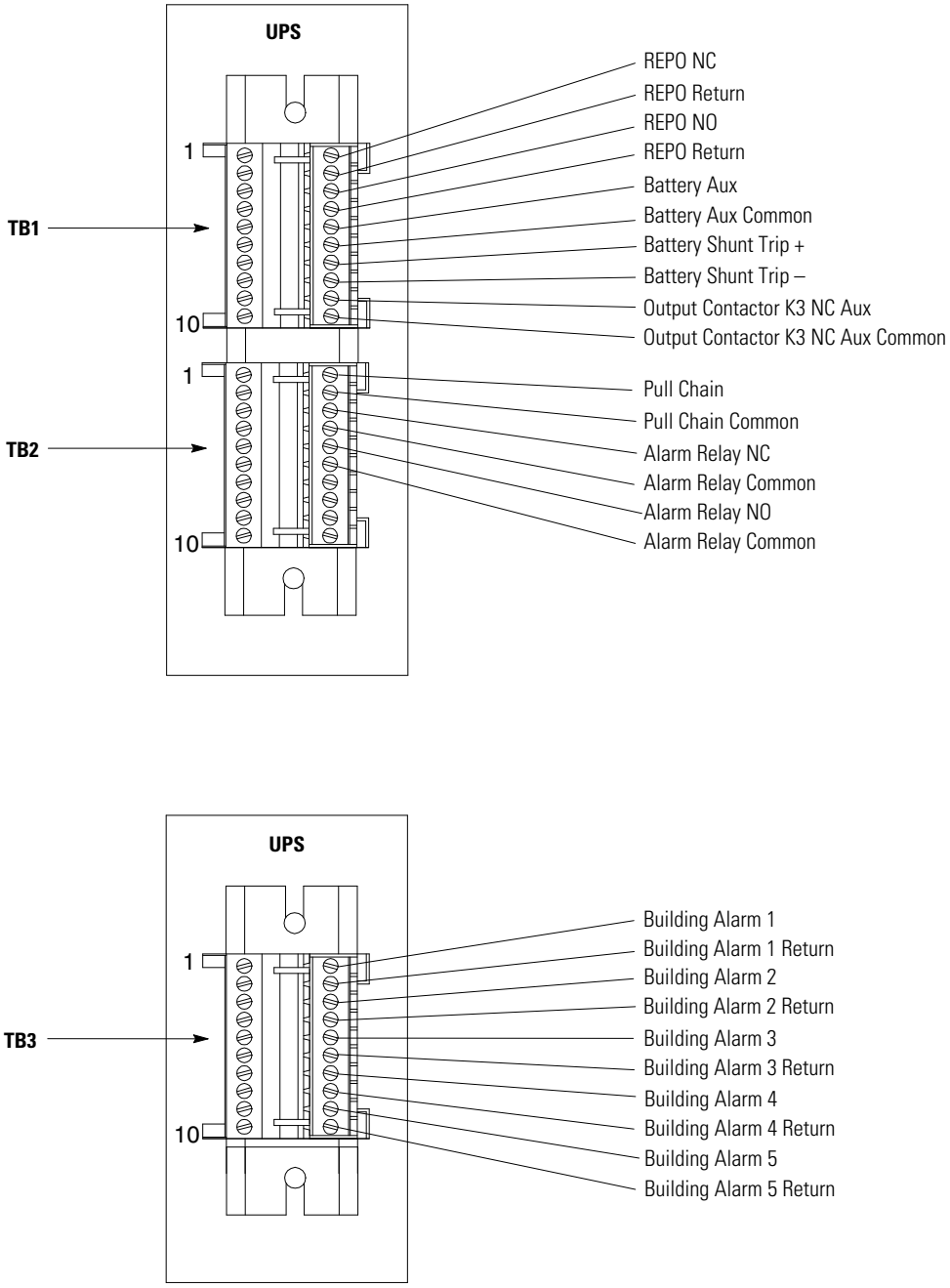


**NOTE** *All building alarm inputs require an isolated normally-open or normally-closed contact or switch (rated at 24 Vdc, 20 mA minimum) connected between the alarm input and common terminal as shown. Building alarm inputs can be programmed for use with either normally-open or normally-closed contacts. All control wiring and relay and switch contacts are customer-supplied.*

**NOTE** *The building alarms can be programmed to display the alarm functional name.*

**NOTE** *A jumper wire must be connected between pins 1 and 2 on TB1, if the normally-closed REPO contact is not used.*

**Figure 4-15. Terminal Blocks TB1, TB2, and TB3 Connector Assignments**

### 4.7.2 TB1 Battery Interface Connections

***NOTE*** *The 9395 system can trip a maximum of six battery cabinets total. This applies to both the 1085 standard and High Rate series batteries. If more than six battery cabinets in total are needed in a separate UPM battery configuration, DO NOT hook up the shunt trips.*

To install wiring to connections:

1. Verify the UPS system is turned off and all power sources are removed. See Chapter 7, "UPS Operating Instructions," for shutdown instructions.
2. Unfasten the front door latch and swing the door open (see Figure 4-2).
3. Remove the door. Remove the retaining screw located inside the door at the bottom hinge pivot point, then lift the door off. Retain the hardware for later use.
4. If installing interface wiring through the left interface entry conduit landing, proceed to Step 5; otherwise, proceed to Step 7.
5. If not already accomplished, remove one top screw and two bottom screws securing the UPS left front panel (see Figure 4-2). Lift the panel straight up to remove it from the panel hanger bracket at the top of the cabinet.
6. Remove the screws securing the internal safety shield panel and remove the panel. Retain the hardware for later use.
7. To gain access to terminal blocks TB1 and the interface entry conduit landing plates, loosen the screws securing the small top internal safety shield panel and remove the panel. This panel is to the right of the X-Slot communication bays (see Figure 4-12).
8. To locate the appropriate terminals and review the wiring and termination requirements, see paragraph 3.2.3, Table 4-1, and Figure 4-12 through Figure 4-17.

***NOTE*** *When installing Shunt trip and Aux battery interface wiring to the UPS interface terminals, conduit must be installed between the UPS and battery cabinets or battery system.*

9. Remove the UPS cabinet interface entry conduit landing plates to drill or punch holes (see Figure 4-4).
10. Reinstall the interface entry plates and install the conduit.
11. If using an Eaton battery cabinet, proceed to Step 12; otherwise, proceed to Step 15.

***NOTE*** *The 9395 system can trip a maximum of six battery cabinets total. This applies to both the 1085 standard and High Rate series batteries. If more than six battery cabinets in total are needed in a separate UPM battery configuration, DO NOT hook up the shunt trips.*

12. Route the Shunt trip and Aux wiring from the battery cabinet or battery disconnect to the UPS cabinet. See Figure 4-4 and Figure 4-5 for UPS wiring access information and terminal locations. Refer to the *Power Xpert 9395 Integrated Battery Cabinet (Model 1085 and 1085HR) Installation Manual*, listed in paragraph 1.8, for battery cabinet wiring access information and instructions.
13. Connect the wiring to TB1 terminals.
14. Proceed to Step 18.

15. Route the Shunt trip and Aux wiring from the battery cabinet or battery disconnect to the UPS cabinet. See Figure 4-4 and Figure 4-5 for UPS wiring access information and terminal locations.
16. Connect the wiring to the TB1 terminals.
17. Reinstall the small top internal safety shield panel and secure with the cabinet mounted screws.
18. If wiring X-Slot connections, proceed to paragraph 4.7.3; otherwise, proceed to Step 19.
19. Reinstall the front door removed in Step 3 and secure with the retained hardware.
20. Close the door and secure the latch.
21. If removed, reinstall the safety shield panel removed in Step 6. Secure with the retained hardware.
22. If removed, reinstall the left front panel removed in Step 5 and secure with the retained hardware.

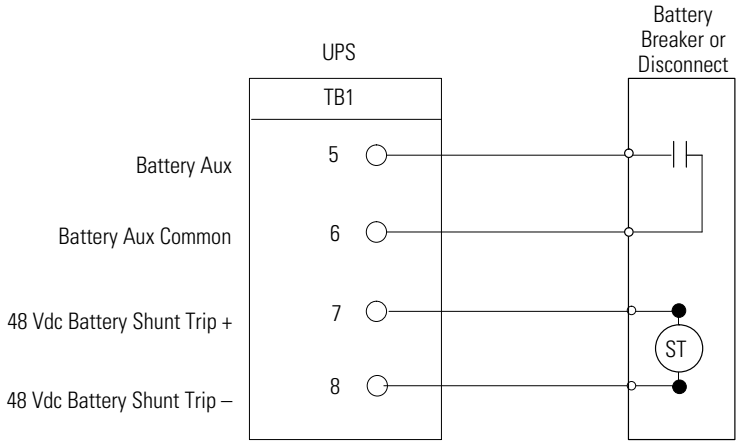


**NOTE** *Battery Aux and DC Shunt Trip wiring should be a minimum of 18 AWG.*

**Figure 4-16. Typical Battery Interface Connection**

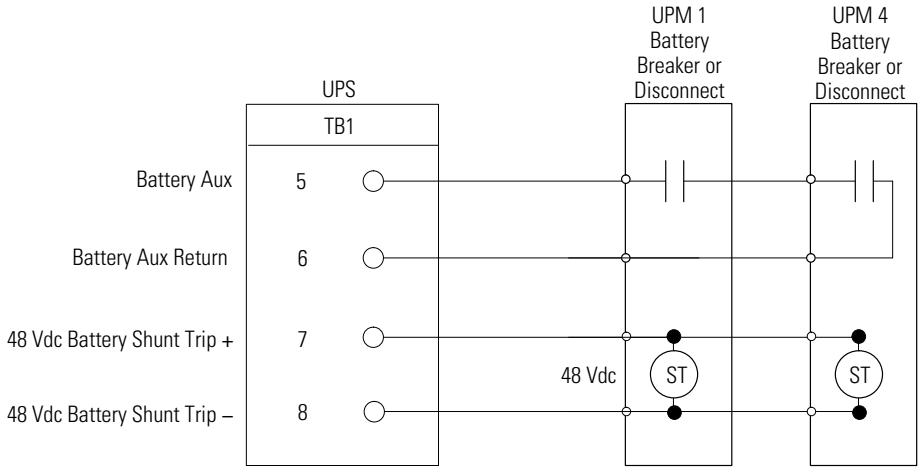


**NOTE** *Battery aux and DC shunt trip wiring should be a minimum of 18 AWG.*

**Figure 4-17. Typical Battery Interface Connection – Separate Battery System**

### 4.7.3 X-Slot Connections

***NOTE*** *LAN drops for use with X-Slot cards must be provided by the customer.*

***NOTE*** *When installing external wiring to X-Slot cards, conduit must be installed to the UPS cabinet. When installing internal wiring to X-Slot terminals, route the wiring through the internal opening in the X-Slot communication bay.*

For installation and setup of an X-Slot card, contact an Eaton service representative (see page -10).

To install wiring to connections:

1. If not already installed, install the LAN drops.
2. Unfasten the front door latch and swing the door open (see Figure 4-2).
3. Remove the UPS cabinet interface entry conduit landing plates to drill or punch holes (see Figure 4-4).
4. Reinstall the interface entry plates and install the conduit.
5. Route and install the LAN and other cables to the appropriate X-Slot cards. See Figure 4-12 and Figure 4-18 for X-Slot communication bay locations.
6. Close the front door and secure the latch.
7. Refer to the manual supplied with the X-Slot card for operator instructions.

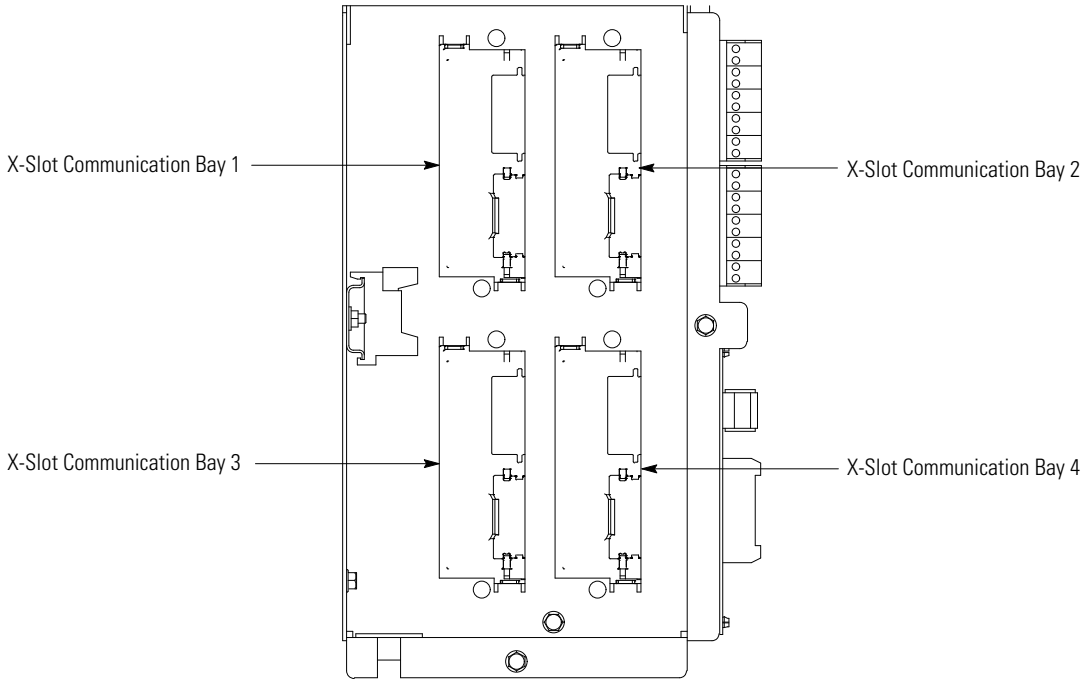


**Figure 4-18. X-Slot Communication Bays**

## 4.8 Installing a REPO Switch

A latching-type Remote Emergency Power-off (REPO) switch can be used in an emergency to shut down the UPS and remove power to the critical load from a location away from where the UPS is installed. Figure 4-19 shows a REPO switch.

***NOTE*** *Before installing a REPO switch, verify that the UPS was installed according to the instructions in paragraphs 4.2 through 4.7.*

***NOTE*** *When installing the REPO switch, you must install conduit between the device and the UPS cabinet for wiring the switch.*

***NOTE*** *Remove the UPS cabinet interface entry conduit landing plates to drill or punch holes (Figure 4-4).*

***NOTE*** *The REPO switch must be a normally-open or normally-closed latching-type switch not tied into any other circuits.*

***NOTE*** *This procedure is intended to be used for the installation of the Eaton-supplied REPO switch. If installing another manufacturer's switch, use this procedure only as a guide.*

***NOTE*** *The REPO switch wiring must be in accordance with NEC Article 725 Class 2 requirements.*

To Install a REPO switch:

1. Verify the UPS system is turned off and all power sources are removed. See Chapter 7, “UPS Operating Instructions,” for shutdown instructions.
2. Securely mount the REPO switch. Recommended locations include operator's consoles or near exit doors. See Figure 3-7 for enclosure dimensions and wiring knockouts.
3. Unfasten the front door latch and swing the door open (see Figure 4-2).
4. Remove the door. Remove the retaining screw located inside the door at the bottom hinge pivot point, then lift the door off. Retain the hardware for later use.

5. If installing interface wiring through the left interface entry conduit landing, proceed to Step 6; otherwise, proceed to Step 8.

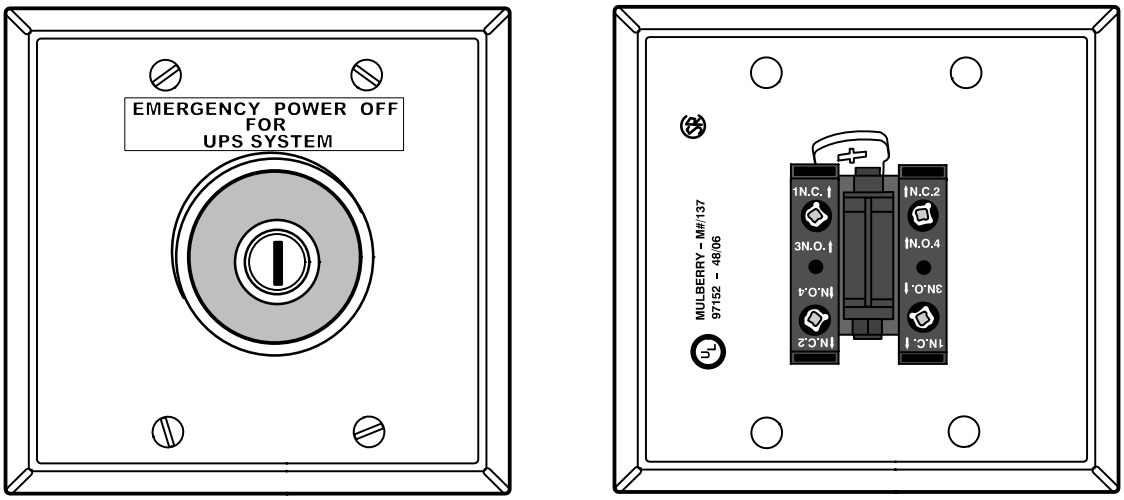


REPO Switch (Front View)

Contact Block (Back View, Faceplate Removed)

**Figure 4-19. REPO Switch**

6. If not already accomplished, remove one top screw and two bottom screws securing the UPS left front panel (see Figure 4-2). Lift the panel straight up to remove it from the panel hanger bracket at the top of the cabinet.

7. Remove the screws securing the internal safety shield panel and remove the panel. Retain the hardware for later use.

8. To gain access to terminal blocks TB1 and TB2 and the interface entry conduit landing plates, loosen the screws securing the small top internal safety shield panel and remove the panel. This panel is to the right of the X-Slot communication bays (see Figure 4-12).

9. Remove the UPS cabinet interface entry conduit landing plates to drill or punch holes (see Figure 4-4).

10. Reinstall the interface entry plates and install conduit.

11. To locate the appropriate terminals and review the wiring and termination requirements, see paragraph 3.2.3, Table 4-1, and Figure 4-12 through Figure 4-15.

12. Route and connect the wiring as shown in Table 4-2 and Figure 4-20.

13. If the normally-closed REPO TB1 connection in the UPS is not used, connect a jumper wire between pins 1 and 2 on TB1.

14. If you are installing multiple REPO switches, wire additional switches in parallel with the first REPO.

**Table 4-2. REPO Wire Terminations**

| From REPO Station(s) Switch Contact Block (Either Block) | To Customer Interface Terminal Board TB1 in UPS Cabinet | Wire Size | Tightening Torque |
|---|---|---|---|
| 3 NO | TB1-3 | Twisted Wires (2) 14–22 AWG (0.75–4.0 $mm^2$) | 7 lb in (0.8 Nm) |
| 4 NO | TB1-4 | | |

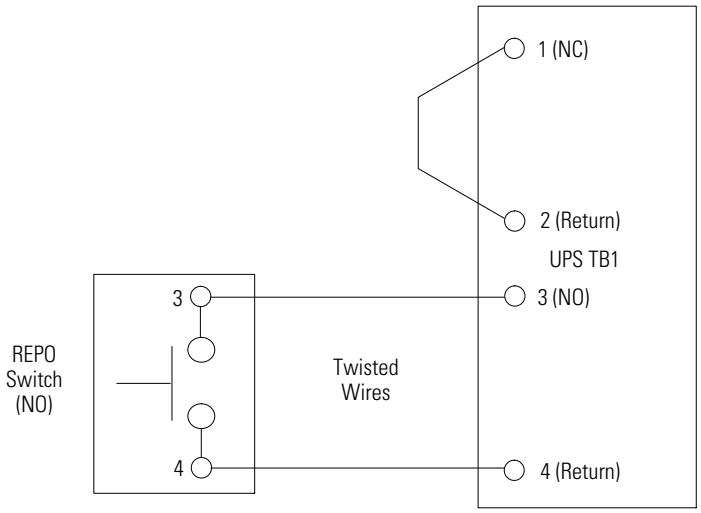


**NOTE** *REPO switch rating is 24 Vdc, 1A minimum.*
**NOTE** *The REPO switch must be a latching-type switch not tied to any other circuits.*
**NOTE** *REPO normally-open and normally-closed return terminals are separated on the terminal board but are electrically in common.*

**Figure 4-20. Normally-Open REPO Switch Wiring**

**15.** If required, install wiring from the REPO switch to the trip circuitry of the upstream protective devices. A second contact block is provided on the REPO switch for this function (see Figure 4-19). The REPO switch wiring must be in accordance with NEC Article 725 Class 2 requirements.

**16.** Reinstall the small top internal safety shield panel and secure with the cabinet mounted screws.

**17.** Reinstall the front door removed in Step 4 and secure with the retained hardware.

**18.** Close the door and secure the latch.

**19.** If removed, reinstall the safety shield panel removed in Step 7. Secure with the retained hardware.

**20.** If removed, reinstall the left front panel removed in Step 6 and secure with the retained hardware.

Figure 4-21 shows the wiring connections if the normally-closed REPO contacts are used, and Figure 4-22 shows alternative methods of connecting a REPO switch if using another manufacturer's switch.

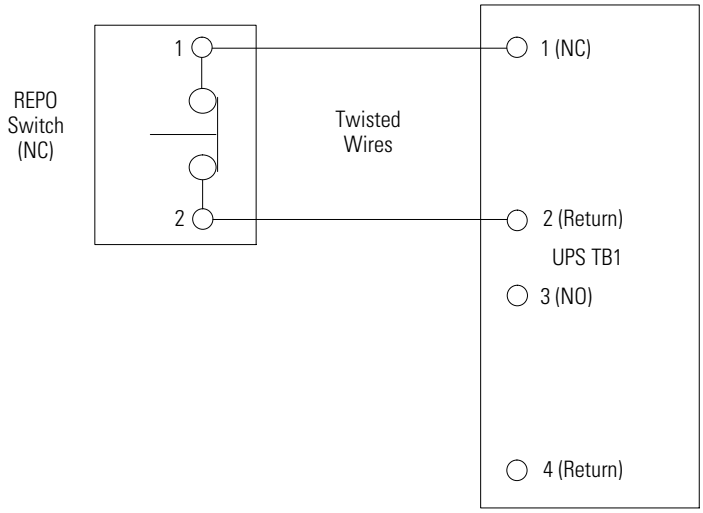


**NOTE** *REPO switch rating is 24 Vdc, 1A minimum.*
**NOTE** *The REPO switch must be a latching-type switch not tied to any other circuits.*
**NOTE** *REPO normally-open and normally-closed return terminals are separated on the terminal board but are electrically in common.*

**Figure 4-21. Normally-Closed REPO Switch Wiring**

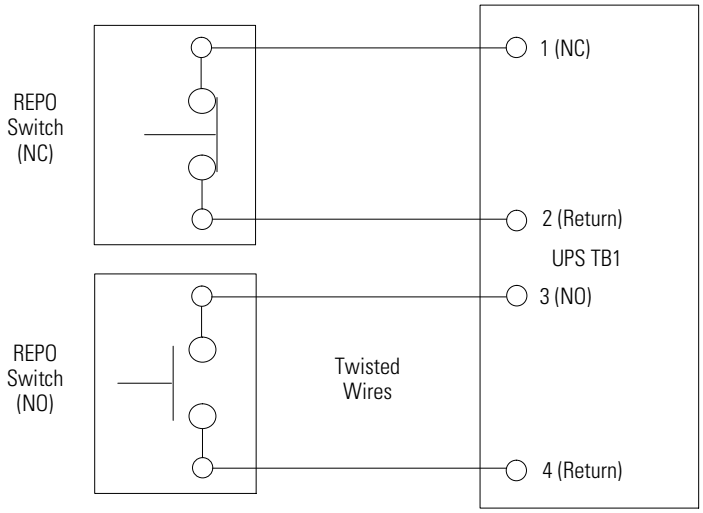


**NOTE** *REPO switch rating is 24 Vdc, 1A minimum.*
**NOTE** *The REPO switch must be a latching-type switch not tied to any other circuits.*
**NOTE** *REPO normally-open and normally-closed return terminals are separated on the terminal board but are electrically in common.*

**Figure 4-22. Normally-Closed and Normally-Open REPO Switch Wiring**

## 4.9 Installing Options, Accessories, and Distributed Bypass Control Wiring

To install options, accessories, and distributed bypass control wiring, see Chapter 5, "Installing Options and Accessories."

## 4.10 Initial Startup

Startup and operational checks must be performed by an authorized Eaton Customer Service Engineer, or the warranty terms specified on page W-1 become void. This service is offered as part of the sales contract for the UPS. Contact an Eaton service representative in advance (usually a two-week notice is required) to reserve a preferred startup date.

## 4.11 Completing the Installation Checklist

The final step in installing the UPS system is completing the following Installation Checklist. This checklist ensures that you have completely installed all hardware, cables, and other equipment. Complete all items listed on the checklist to ensure a smooth installation. Make a copy of the Installation Checklist before filling it out, and retain the original.

After the installation is complete, an Eaton Customer Service Engineer must verify the operation of the UPS system and commission it to support the critical load. The service representative cannot perform any installation tasks other than verifying software and operating setup parameters. Service personnel may request a copy of the completed Installation Checklist to verify all applicable equipment installations have been completed.

***NOTE*** *The Installation Checklist MUST be completed prior to starting the UPS system for the first time.*

## Installation Checklist

- ❑ All packing materials and restraints have been removed from each cabinet.
- ❑ Each cabinet in the UPS system is placed in its installed location.
- ❑ A cabinet grounding/mounting kit is installed between any cabinets that are bolted together.
- ❑ All conduits and cables are properly routed to the UPS and any ancillary cabinets.
- ❑ All power cables are properly sized and terminated.
- ❑ Battery cables are terminated on E4 (+) and E5 (–).
- ❑ Battery aux contact signal wiring is connected from the UPS to the battery disconnect.
- ❑ Battery shunt trip signal wiring is connected from the UPS to the battery disconnect. (OPTIONAL)
- ❑ LAN drops are installed.
- ❑ All LAN connections have been completed.
- ❑ A ground conductor is properly installed.
- ❑ Air conditioning equipment is installed and operating correctly.
- ❑ The area around the installed UPS system is clean and dust-free. (It is recommended that the UPS be installed on a level floor suitable for computer or electronic equipment.)
- ❑ Adequate workspace exists around the UPS and other cabinets.
- ❑ Adequate lighting is provided around all UPS equipment.
- ❑ A 120 Vac service outlet is located within 7.5 meters (25 feet) of the UPS equipment.
- ❑ The REPO device is mounted in its installed location and its wiring is terminated inside the UPS cabinet.
- ❑ The normally-closed (NC) Emergency Power-off contact (pins 1 and 2 on TB1) is jumpered if not used.
- ❑ Alarm relays and building alarms are wired appropriately. (OPTIONAL)
- ❑ A remote battery disconnect control is mounted in its installed location and its wiring is terminated inside the UPS and battery cabinet. (OPTIONAL)
- ❑ Accessories are mounted in installed locations and wiring is terminated inside the UPS cabinet. (OPTIONAL)
- ❑ The debris shield covering the UPS cabinet ventilation grill is removed.
- ❑ Startup and operational checks are performed by an authorized Eaton Customer Service Engineer.

## Distributed Bypass Installation Checklist

- ❑ Each cabinet in the distributed bypass system is placed in its installed location.
- ❑ All conduits and cables are properly routed to the UPS cabinets and to the tie cabinet or distribution panel.
- ❑ All power cables are properly sized and terminated.
- ❑ A ground conductor is properly installed.
- ❑ Controller Area Network (CAN) wiring between the UPS cabinets is properly installed.
- ❑ Pull-chain wiring between the UPS cabinets is properly installed.
- ❑ Adequate workspace exists around the UPS cabinets, the tie cabinet, and other cabinets.
- ❑ Startup and operational checks are performed by an authorized Eaton Customer Service Engineer.

## Notes

This page intentionally left blank.

# Chapter 5 Installing Options and Accessories

## 5.1 Installation Notes

Read and understand the following notes while planning and performing the wiring installation:

- Conduit must be installed between the UPS cabinet and the device for signal wiring. Conduit must be installed between the device and the power source for power wiring. Install the signal wiring in separate conduit from the power wiring.
- Conduit and wiring between the UPS and the device are to be supplied by the customer.
- Maximum distance between the UPS cabinet and the device is not to exceed 150 meters (500 feet).
- Use Class 1 wiring methods (as defined by the NEC) for interface and power wiring from 30 to 600V.
- Use Class 2 wiring methods (as defined by the NEC) for interface and power wiring up to 30V. The wire should be rated at 24V, 1A minimum.
- Signal wiring should be a minimum of 22 AWG and a maximum of 14 AWG. The wire should be shielded twisted pair, rated for 5A maximum. Power wiring should be a minimum of 22 AWG and a maximum of 14 AWG. The wire should be rated for 1A minimum.
- Use only 75°C copper wire.
- 120 Vac for the RMP II, RIM II, or SCM II should be provided from the critical bus by facility planners or the customer.

Install wiring the optional accessories in accordance with the following paragraphs:

- Powerware Hot Sync CAN Bridge card (see paragraph 5.2)
- Distributed bypass parallel system wiring (see paragraph 5.3)
- RMP II (see paragraph 5.4)
- RIM II (see paragraph 5.5)
- SCM II (see paragraph 5.6)

## 5.2 Installing an Optional Powerware Hot Sync CAN Bridge Card

As an option, a Powerware Hot Sync Controller Area Network (CAN) Bridge Card, shown in Figure 5-1, can be installed to provide connectivity for operational mode control of a parallel system. In addition, this card can be used to connect optional system monitoring devices, such as a Remote Monitor Panel II, a Relay Interface Module II, or a Supervisory Contact Module II to the UPS.

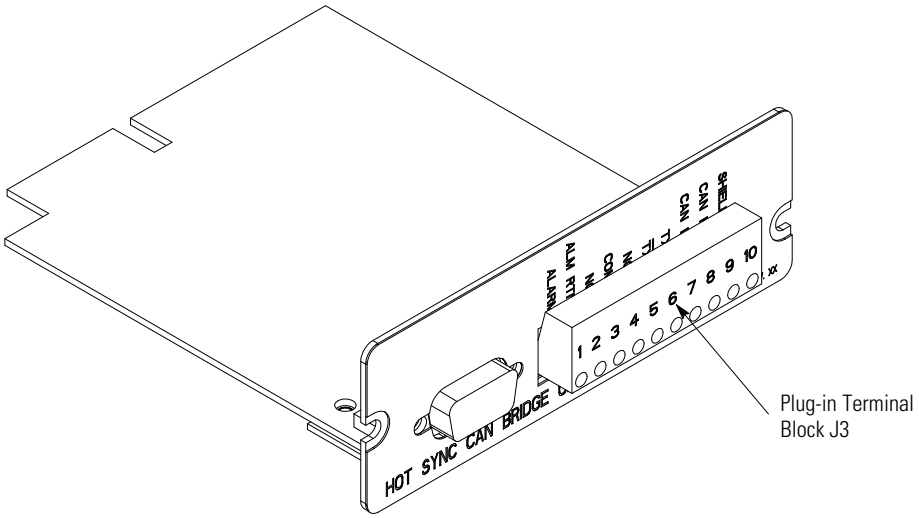


**Figure 5-1. Powerware Hot Sync CAN Bridge Card**

***NOTE*** *Only one Powerware Hot Sync CAN Bridge Card can be installed in the UPS. Multiple CAN cards are not supported and will cause system conflicts.*

To install the card:

1. Verify the UPS system is turned off and all power sources are removed. See Chapter 7, "UPS Operating Instructions," for shutdown instructions.
2. Unfasten the front door latch and swing the door open (see Figure 4-2).
3. If installing interface wiring through the left interface entry conduit landing, proceed to Step 4; otherwise, proceed to Step 6.
4. Remove one top screw and two bottom screws securing the UPS left front panel (see Figure 4-2). Lift the panel straight up to remove it from the panel hanger bracket at the top of the cabinet.
5. Remove the screws securing the internal safety shield panel and remove the panel. Retain the hardware for later use.
6. Install the Powerware Hot Sync CAN Bridge Card into an open X-Slot communication bay on the front of the UPS. See Figure 4-12 and Figure 4-18 for X-Slot communication bay locations.

   To locate the appropriate terminals on the Powerware Hot Sync CAN Bridge Card, see Figure 5-2 and Table 5-1.

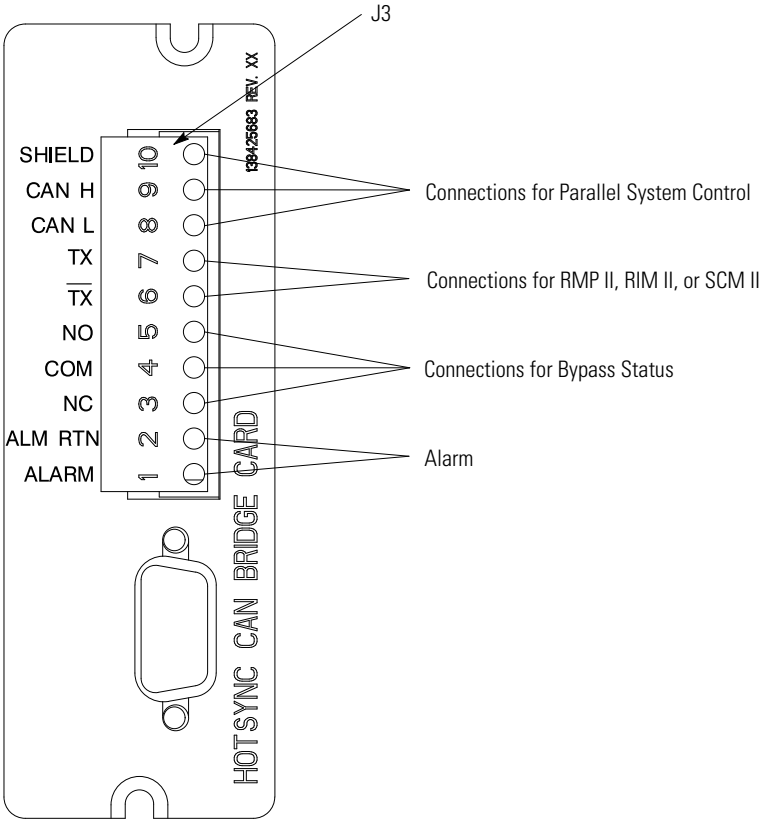


**Figure 5-2. Powerware Hot Sync CAN Bridge Card Connections**

**Table 5-1. Powerware Hot Sync CAN Bridge Card Interface Connections**

| J3 Terminal | Name | Description |
|---|---|---|
| 1 | Alarm | Programmable UPS alarm. Activated by a remote dry contact closure. |
| 2 | Alarm Return | |
| 3 | Alarm Relay NC | Normally-closed contact opens when UPS is on bypass. |
| 4 | Alarm Relay Com | Bypass contact return. |
| 5 | Alarm Relay NO | Normally-open contact closes when UPS is on bypass. |
| 6 | TX | RMP II, RIM II, and SCM II connections. |
| 7 | TX | |
| 8 | CAN L | CAN Input for parallel operation. |
| 9 | Can H | |
| 10 | Shield | |

## 5.3 Installing Distributed Bypass Control Wiring

***NOTE*** *When installing external wiring to the Powerware Hot Sync CAN Bridge Card, conduit must be installed to the UPS cabinet. When installing internal wiring to the Powerware Hot Sync CAN Bridge Card terminals, route the wiring through the internal opening in the X-Slot communication bay.*

***NOTE*** *When installing interface wiring for the pull chain, conduit must be installed between UPSs.*

To install distributed bypass control wiring:

**1.** Verify the UPS system is turned off and all power sources are removed. See Chapter 7, "UPS Operating Instructions," for shutdown instructions.

**2.** Perform the procedure listed in paragraph 5.2.

**3.** Terminal block TB3 is accessible on the left side of the X-Slot communication bay (see Figure 4-12). To gain access to terminal block TB1, TB2, and the left interface entry conduit landing plates, loosen the screws securing the small top internal safety shield panel and remove the panel. This panel is to the right of the X-Slot communication bay (see Figure 4-12). Retain the hardware for later use.

**4.** Remove the interface entry conduit landing plates to drill or punch holes (see Figure 4-4).

**5.** Reinstall the interface entry plates and install the conduit.

**6.** To locate the appropriate terminals and review the wiring and termination requirements, see paragraph 3.2.4, Table 4-1, and Figure 4-12 through Figure 4-15.

**7.** Route and install CAN wiring between the UPS cabinets. See Figure 5-2 and Table 5-1 for the Powerware Hot Sync CAN Bridge Card terminal location and Figure 5-3, Figure 5-4, and Table 5-2 for wiring information.

**8.** If a tie cabinet with Module Output Breakers (MOBs) is being wired, proceed to Step 11; otherwise, proceed to Step 9.

**9.** Route and install distributed bypass system pull-chain wiring between the UPS cabinets. See Figure 5-5 and Table 5-3 for wiring information.

**10.** Proceed to Step 12.

**11.** Route and install distributed bypass system pull-chain wiring between the UPS cabinets and tie cabinet MOBs. See Figure 5-6 and Table 5-4 for wiring information.

***NOTE*** *Setup of the Powerware Hot Sync CAN Bridge Card for parallel operation must be performed by an authorized Eaton Customer Service Engineer. Contact an Eaton service representative to schedule a date.*

**12.** Reinstall the small top internal safety shield panel and secure with the cabinet mounted screws.

**13.** Close the front door and secure the latch.

**14.** If removed, reinstall the safety shield panel removed in paragraph 5.2, Step 5. Secure with the retained hardware.

**15.** If removed, reinstall the left front panel removed in paragraph 5.2, Step 4 and secure with the retained hardware.

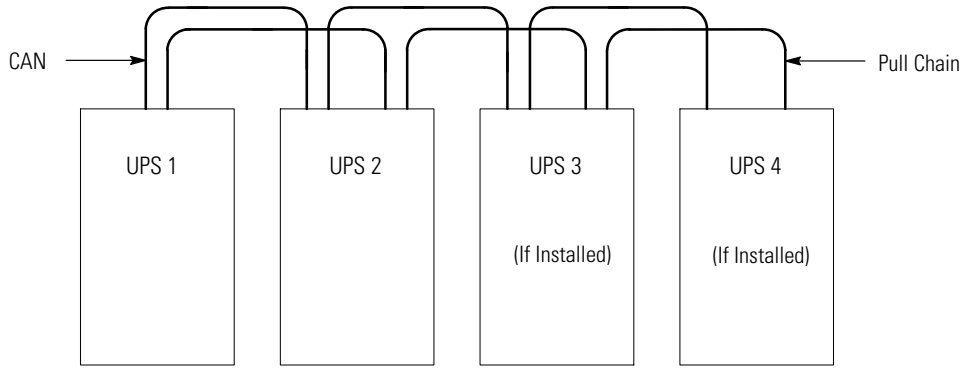


**NOTE** *This drawing is for distributed bypass wiring purposes and is not a floor layout plan. UPSs can be placed in any physical order.*

**Figure 5-3. Distributed Bypass System CAN and Pull-Chain Simplified Interface Wiring**

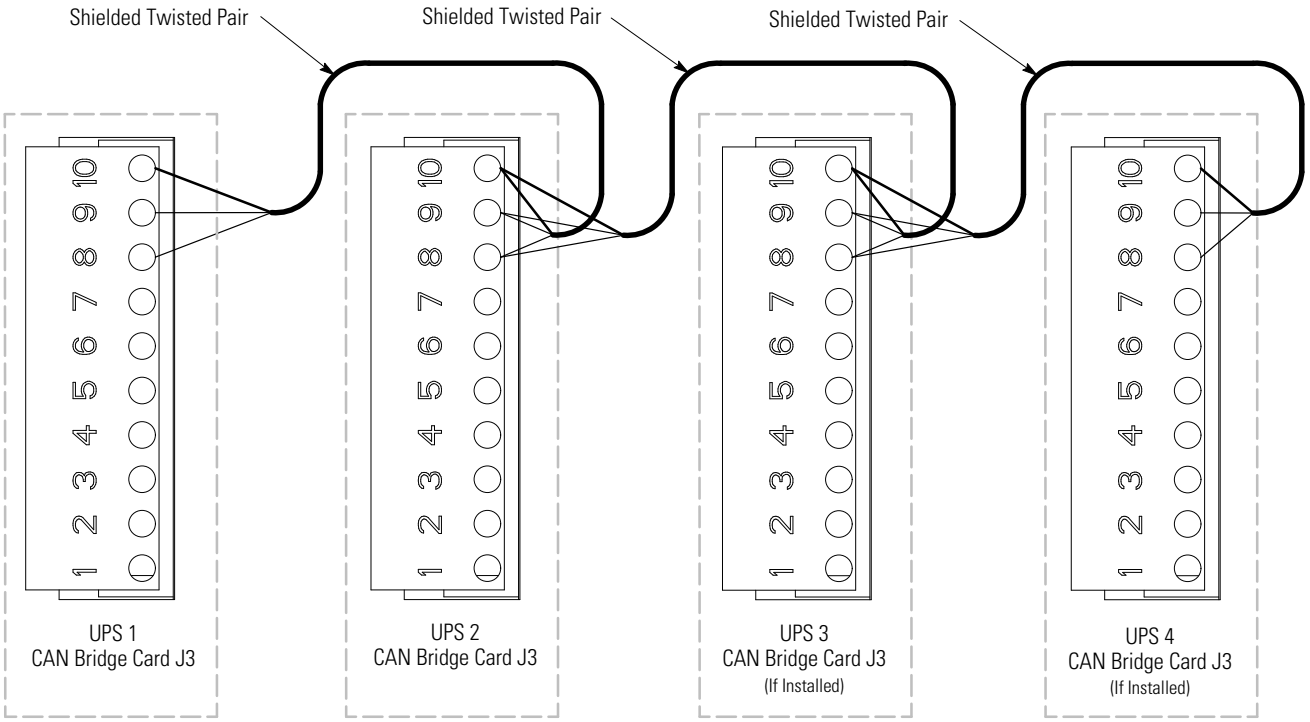


**NOTE** *External CAN connections between UPSs require shielded twisted-pair wire.*

**Figure 5-4. Distributed Bypass System UPS CAN Wiring without MOBs**

**Table 5-2. CAN Bridge Card Wiring Terminations**

| From UPS 1 CAN Bridge Card | To UPS 2 CAN Bridge Card | To UPS 3 CAN Bridge Card (If Installed) | To UPS 4 CAN Bridge Card (If Installed) |
|---|---|---|---|
| J3–8 (L) | J3–8 (L) | J3–8 (L) | J3–8 (L) |
| J3–9 (H) | J3–9 (H) | J3–9 (H) | J3–9 (H) |
| J3–10 (Shield) | J3–10 (Shield) | J3–10 (Shield) | J3–10 (Shield) |

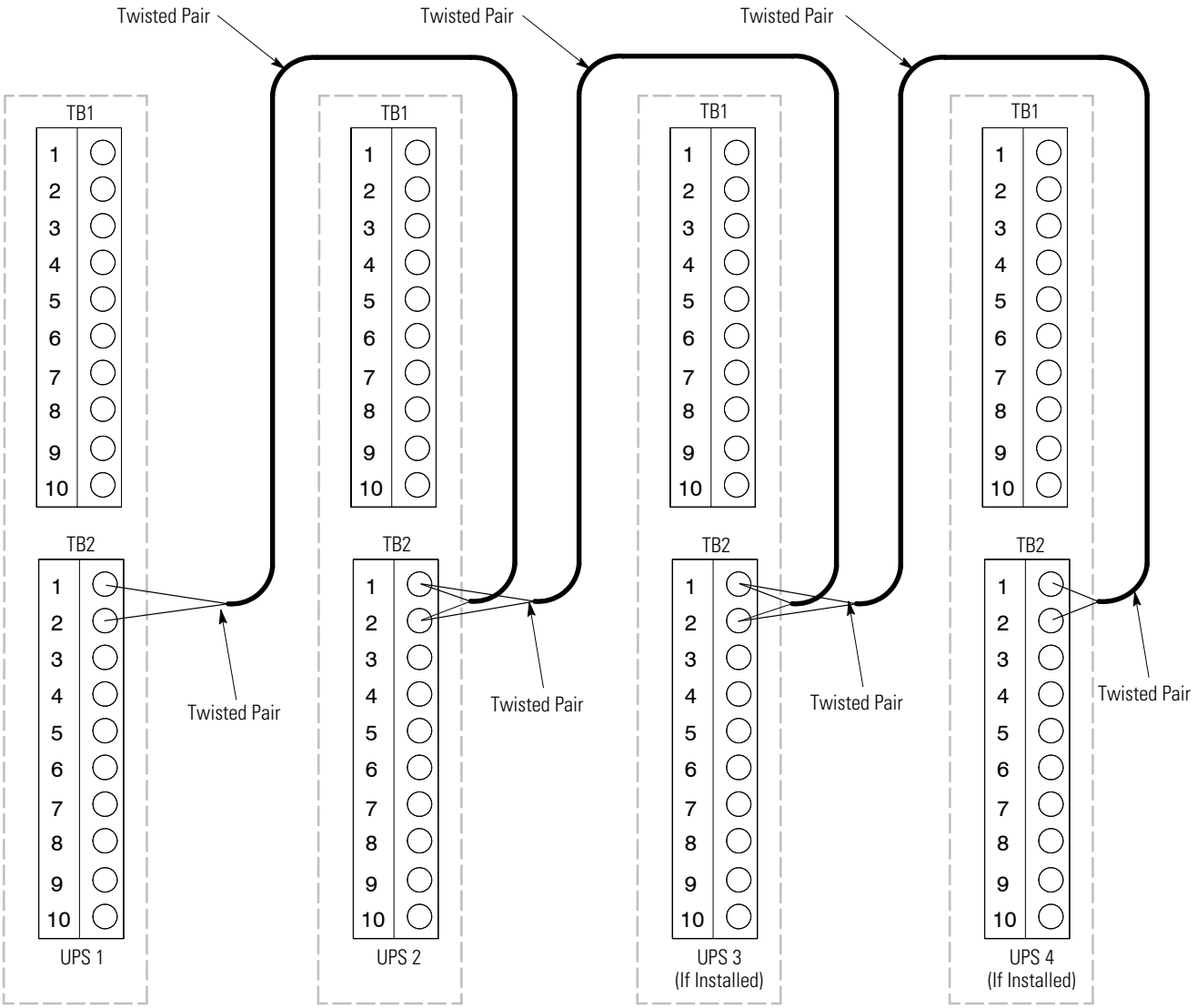


**NOTE** *Use twisted-pair wiring between the UPS and MOB AUX contacts.*

**Figure 5-5. Distributed Bypass Pull-Chain Wiring without MOBs**

**Table 5-3. Pull-Chain Wiring Terminations**

| From UPS 1 | To UPS 2 | To UPS 3 (If Installed) | To UPS 4 (If Installed) |
|---|---|---|---|
| TB2–1 (Pull Chain) | TB2–1 (Pull Chain) | TB2–1 (Pull Chain) | TB2–1 (Pull Chain) |
| TB2–2 (Pull Chain Common) | TB2–2 (Pull Chain Common) | TB2–2 (Pull Chain Common) | TB2–2 (Pull Chain Common) |

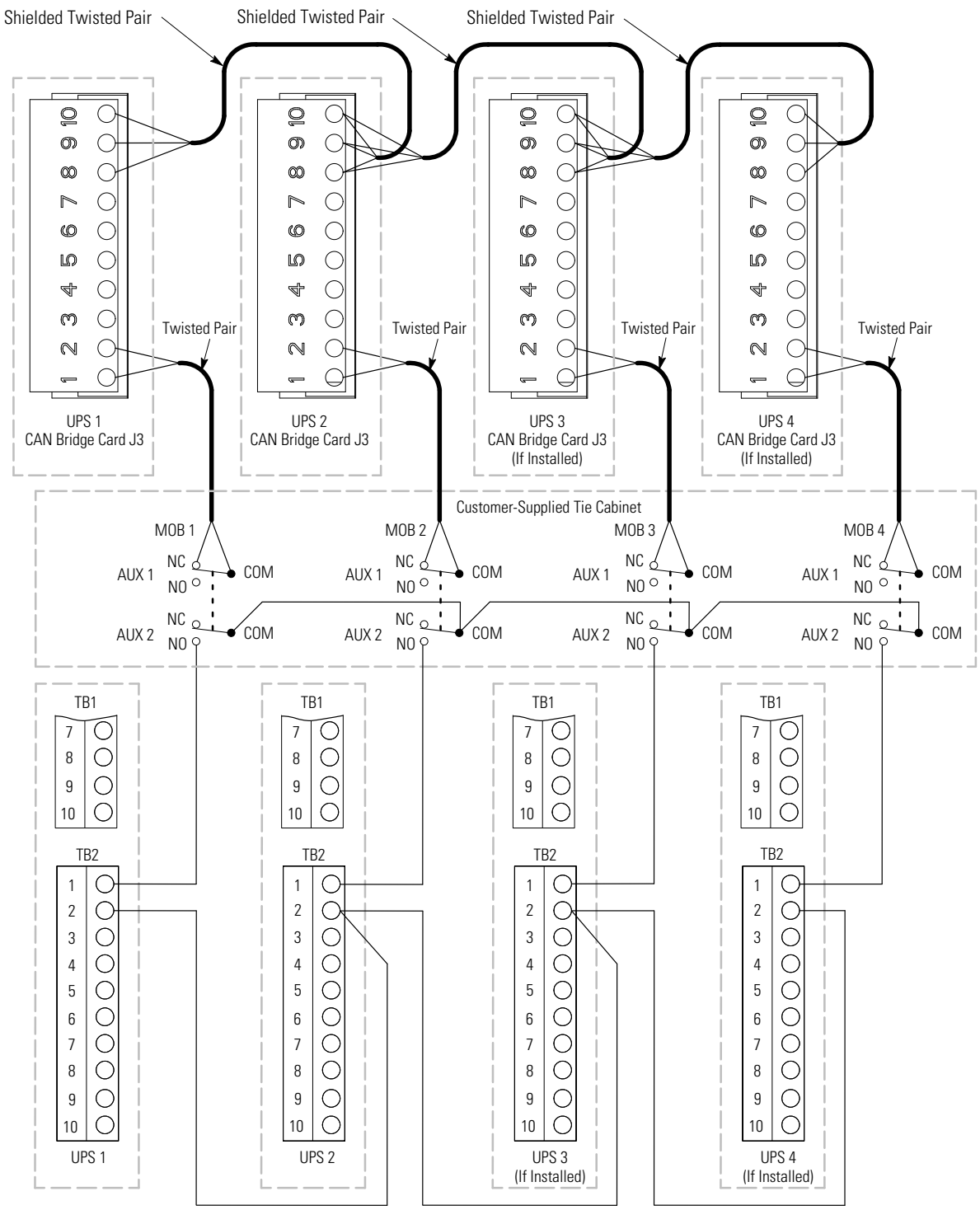


**NOTE** *NC and NO designations on MOB AUX contacts are defined with breaker in OFF (open) position.*
**NOTE** *If MOB contacts have pigtail leads, use the same wire gauge to connect to the UPS and use the correct crimp connections for the wire gauge.*
**NOTE** *External CAN connections between UPS cabinets require shielded twisted-pair wire.*
**NOTE** *Use twisted-pair wiring between the UPS and MOB AUX contacts.*
**NOTE** *Always confirm contact operation prior to wiring.*

**Figure 5-6. Distributed Bypass Pull-Chain Wiring with MOBs**

**Table 5-4. Pull-Chain Wiring Terminations with MOBs**

| From | To | Function |
|---|---|---|
| UPS 1 CAN Bridge Card J3–1 (Alarm) | MOB 1 Aux 1 NC | MOB Open Alarm |
| UPS 1 CAN Bridge Card J3–2 (Alarm Return) | MOB 1 Aux 1 Com | |
| UPS 1 TB2–1 (Pull Chain) | MOB 1 Aux 2 NO | Pull Chain |
| UPS 1 TB2–2 (Pull Chain Common) | UPS 2 TB2–2 (Pull Chain Common) | Pull Chain Common |
| | | |
| UPS 2 CAN Bridge Card J3–1 (Alarm) | MOB 2 Aux 1 NC | MOB Open Alarm |
| UPS 2 CAN Bridge Card J3–2 (Alarm Return) | MOB 2 Aux 1 Com | |
| UPS 2 TB2–1 (Pull Chain) | MOB 2 Aux 2 NO | Pull Chain |
| UPS 2 TB2–2 (Pull Chain Common) | UPS 3 TB2–2 (Pull Chain Common) | Pull Chain Common |
| | | |
| UPS 3 CAN Bridge Card J3–1 (Alarm) | MOB 3 Aux 1 NC | MOB Open Alarm |
| UPS 3 CAN Bridge Card J3–2 (Alarm Return) | MOB 3 Aux 1 Com | |
| UPS 3 TB2–1 (Pull Chain) | MOB 3 Aux 2 NO | Pull Chain |
| UPS 3 TB2–2 (Pull Chain Common) | UPS 4 TB2–2 (Pull Chain Common) | Pull Chain Common |
| | | |
| UPS 4 CAN Bridge Card J3–1 (Alarm) | MOB 4 Aux 1 NC | MOB Open Alarm |
| UPS 4 CAN Bridge Card J3–2 (Alarm Return) | MOB 4 Aux 1 Com | |
| UPS 4 TB2–1 (Pull Chain) | MOB 4 Aux 2 NO | Pull Chain |
| | | |
| MOB 1 Aux 2 Com | MOB 2 Aux 2 Com | Pull Chain MOB Common |
| MOB 2 Aux 2 Com | MOB 3 Aux 2 Com | |
| MOB 3 Aux 2 Com | MOB 4 Aux 2 Com | |

## 5.4 Installing an Optional Remote Monitor Panel II

To install RMP II wiring:

1. Verify the UPS system is turned off and all power sources are removed. See Chapter 7, "UPS Operating Instructions," for shutdown instructions.
2. Perform the procedure listed in paragraph 5.2.

***NOTE*** *If mounting to a hollow wall, secure the enclosure to a wood or metal stud within the wall. Do not use hollow wall anchors.*

3. Securely mount the RMP II at the desired location. See Figure 5-12 for mounting hole locations.

***NOTE*** *When installing signal wiring for CAN card J3 terminals, conduit must be installed between the device and the UPS cabinet.*

4. Remove the UPS cabinet top interface conduit landing plates to drill or punch conduit holes (see Figure 4-4).
5. Reinstall the conduit landing plate.
6. Install conduit between the UPS and RMP II. See Figure 5-12 for RMP II knockout hole location.
7. Install wiring between the UPS and RMP II. See Figure 5-2 and Table 5-1 for the Powerware Hot Sync CAN Bridge Card terminal location and wiring information, and Figure 5-7, Figure 5-8, and Table 5-5 for the RMP II terminal location and wiring information.

***NOTE*** *120 Vac for the RMP II should be supplied from the critical bus by facility planners or the customer.*

8. Install 120 Vac power wiring from the critical bus to the RMP II. See Figure 5-7, Figure 5-8, and Table 5-5 for the terminal location and wiring information.
9. Close the front door and secure the latch.
10. If removed, reinstall the safety shield panel removed in paragraph 5.2, Step 5. Secure with the retained hardware.
11. If removed, reinstall the left front panel removed in paragraph 5.2, Step 4 and secure with the retained hardware.
12. Restart the UPS. See Chapter 7, "UPS Operating Instructions," for startup instructions.

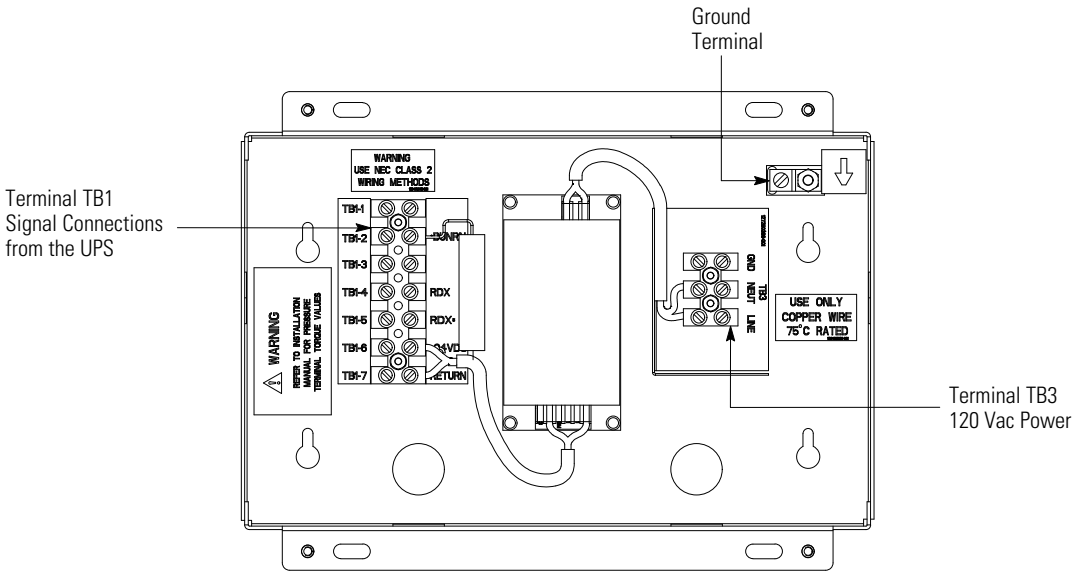


**Figure 5-7. Remote Monitor Panel II and Remote Monitor Panel II Terminal Locations**

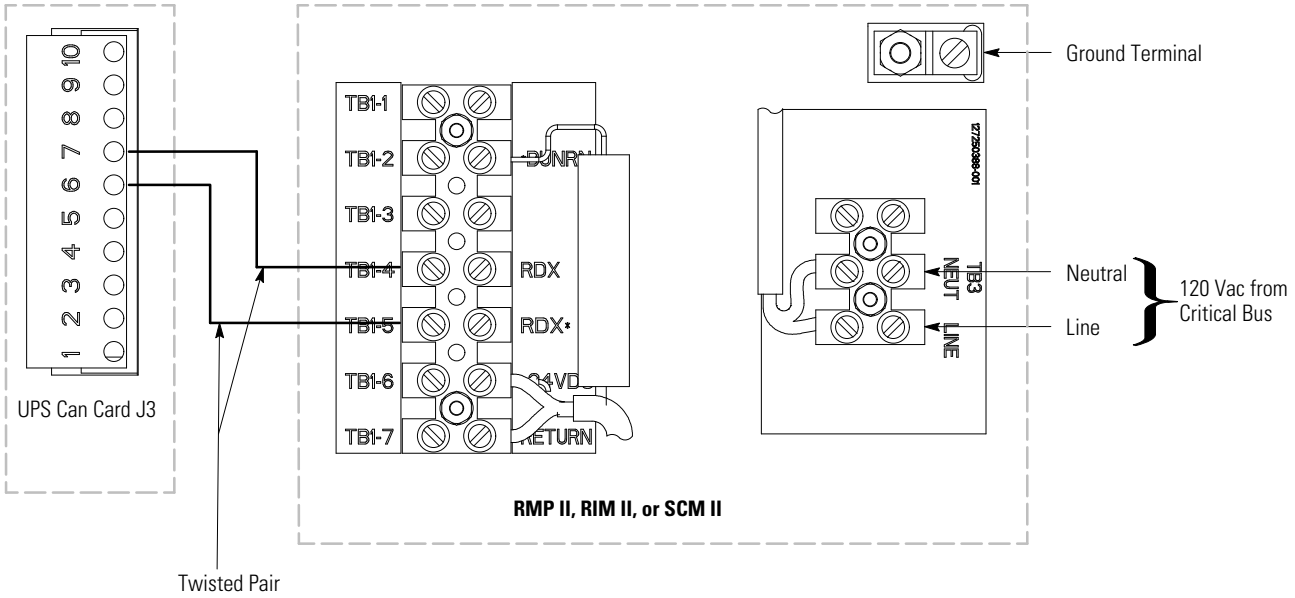


**Figure 5-8. Remote Monitor Panel II, Relay Interface Module II, or Supervisory Contact Module II Wiring**

**Table 5-5. RMP II, RIM II, or SCM II Wiring Terminations**

| From UPS CAN Card | To RMP II, RIM II, or SCM II | Tightening Torque Nm (lb in) | Remarks |
|---|---|---|---|
| J3–6 ($\overline{TX}$) | TB1–5 (RDX*) | 0.9 (8) | Use twisted pair |
| J3–7 (TX) | TB1–4 (RDX) | 0.9 (8) | |
| N/A | TB3 Line | 0.9 (8) | |
| N/A | TB3 Neutral | 0.9 (8) | |
| N/A | Ground Terminal | 2.7 (24) Maximum | |

***NOTE*** *Setup of the Powerware Hot Sync CAN Bridge Card must be performed by an authorized Eaton Customer Service Engineer. Contact an Eaton service representative to schedule a date.*

**13.** To check the operation of the RMP II, ensure that the UPS is supplying the load via inverter or bypass. If the indicators on the RMP II show the appropriate status, then it is operating correctly.

If the communication link between the UPS and the RMP II is not present, the RMP II performs a self-test (all indicators flash and the horn beeps at one-second intervals). If the self-test occurs, check all harness connectors and the fuse for proper seating. If all connections are secure but the RMP II continues to self-test, replace the fuse with the spare included in the hardware kit. If a fuse replacement does not correct the problem, contact an Eaton service representative for verification that the RMP II is working correctly.

**14.** To test the indicator lamps, press and hold the horn silence pushbutton for three seconds. All lamps should illuminate, and the horn sounds continuously until you release the pushbutton.

## 5.5 Installing an Optional Relay Interface Module II

To install RIM II wiring:

**1.** Verify the UPS system is turned off and all power sources are removed. See Chapter 7, "UPS Operating Instructions," for shutdown instructions.

**2.** Perform the procedure listed in paragraph 5.2.

***NOTE*** *If mounting to a hollow wall, secure the enclosure to a wood or metal stud within the wall. Do not use hollow wall anchors.*

**3.** Securely mount the RIM II at the desired location. See Figure 5-13 for mounting hole locations.

***NOTE*** *When installing signal wiring for CAN card J3 terminals, conduit must be installed between the device and the UPS cabinet.*

**4.** Remove the UPS cabinet top interface conduit landing plates to drill or punch conduit holes (see Figure 4-4).

**5.** Reinstall the conduit landing plate.

**6.** Install conduit between the UPS and RIM II. See Figure 5-13 for RIM II knockout hole location.

**7.** Install wiring between the UPS and RIM II. See Figure 5-2 and Table 5-1 for the Powerware Hot Sync CAN Bridge Card terminal location and wiring information, and Figure 5-7, Figure 5-8, and Table 5-5 for the RIM II terminal location and wiring information.

***NOTE*** *120 Vac for the RIM II should be supplied from the critical bus by facility planners or the customer.*

**8.** Install 120 Vac power wiring from the critical bus to the RIM II. See Figure 5-7, Figure 5-8, and Table 5-5 for the terminal location and wiring information.

**9.** Close the front door and secure the latch.

10. If removed, reinstall the safety shield panel removed in paragraph 5.2, Step 5. Secure with the retained hardware.

11. If removed, reinstall the left front panel removed in paragraph 5.2, Step 4 and secure with the retained hardware.

12. Restart the UPS. See Chapter 7, "UPS Operating Instructions," for startup instructions.

***NOTE*** *Setup of the Powerware Hot Sync CAN Bridge Card must be performed by an authorized Eaton Customer Service Engineer. Contact an Eaton service representative to schedule a date.*

13. Contact an Eaton service representative for verification and testing of the RIM II and its connections prior to making connections with J1 through J4 (see Table 5-6 and Figure 5-9).

    You can order interface cables separately for connecting to the 15-Pin D-Sub Connectors.

**Table 5-6. J1 through J4 Interface Connectors**

| Status | J1 through J4 | Description |
|---|---|---|
| **UPS AVAILABLE** | Pins 1 and 12 | Contacts are closed when the UPS is operating in Online mode or ready to supply the load. |
| **UPS OFFLINE** | Pins 3 and 13 | Contacts are open when the UPS is offline. Contacts are closed when the UPS is operating in Online mode. |
| **BATTERY WEAK** | Pins 5 and 14 | Contacts are closed when approximately two minutes of battery time remains before the critical load is lost. |
| **UTILITY FAILURE** | Pins 6 and 15 | Contacts are closed when Utility Failure is detected. |

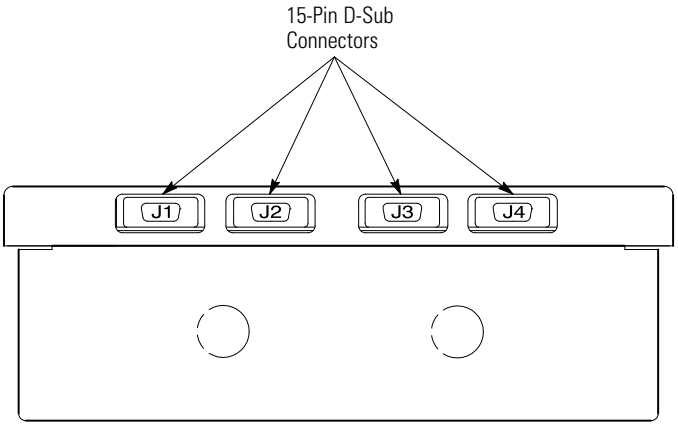


**Figure 5-9. J1, J2, J3, and J4 15-Pin D-Sub Connectors**

## 5.6 Installing an Optional Supervisory Contact Module II

To install SCM II wiring:

1. Verify the UPS system is turned off and all power sources are removed. See Chapter 7, "UPS Operating Instructions," for shutdown instructions.
2. Perform the procedure listed in paragraph 5.2.

***NOTE*** *If mounting to a hollow wall, secure the enclosure to a wood or metal stud within the wall. Do not use hollow wall anchors.*

3. Securely mount the SCM II at the desired location. See Figure 5-14 for mounting hole locations.

***NOTE*** *When installing signal wiring for CAN card J3 terminals, conduit must be installed between the device and the UPS cabinet.*

4. Remove the UPS cabinet top interface conduit landing plates to drill or punch conduit holes (see Figure 4-4).
5. Reinstall the conduit landing plate.
6. Install conduit between the UPS and SCM II. See Figure 5-14 for SCM II knockout hole location.
7. Install wiring between the UPS and SCM II. See Figure 5-2 and Table 5-1 for the Powerware Hot Sync CAN Bridge Card terminal location and wiring information, and Figure 5-10, Figure 5-8, and Table 5-5 for the SCM II terminal location and wiring information.

***NOTE*** *120 Vac for the SCM II should be supplied from the critical bus by facility planners or the customer.*

8. Install 120 Vac power wiring from the critical bus to the SCM II. See Figure 5-10, Figure 5-8, and Table 5-5 for the terminal location and wiring information.

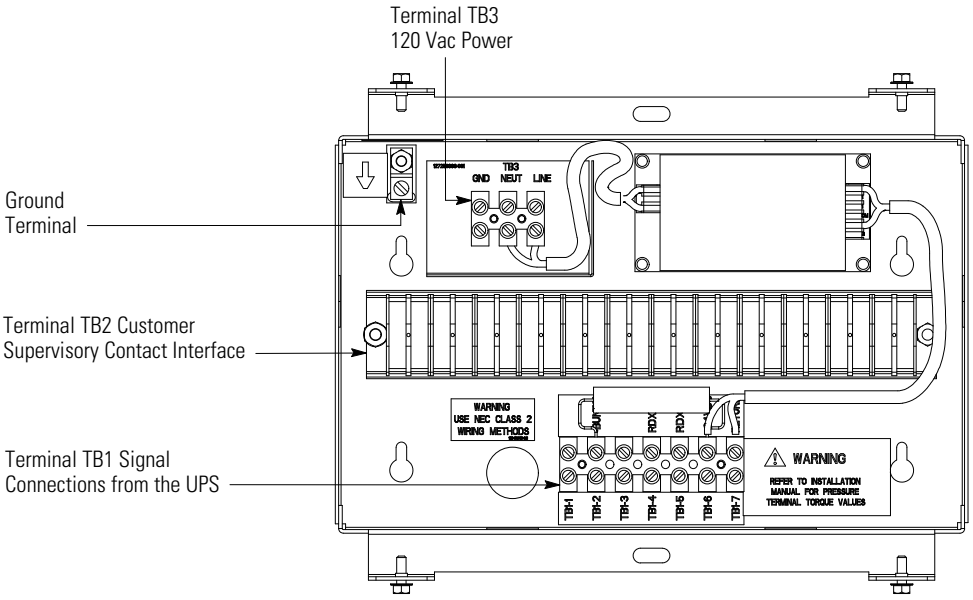


**Figure 5-10. Supervisory Contact Module II Terminal Location**

***NOTE*** *Setup of the Powerware Hot Sync CAN Bridge Card must be performed by an authorized Eaton Customer Service Engineer. Contact an Eaton service representative to schedule a date.*

**9.** Install wiring between the SCM II terminal block TB2 and the monitoring equipment. See Figure 5-10 for terminal block location and Figure 5-11 for terminal assignments.

**10.** Close the front door and secure the latch.

**11.** If removed, reinstall the safety shield panel removed in paragraph 5.2, Step 5. Secure with the retained hardware.

**12.** If removed, reinstall the left front panel removed in paragraph 5.2, Step 4 and secure with the retained hardware.

**13.** Restart the UPS. See Chapter 7, "UPS Operating Instructions," for startup instructions.

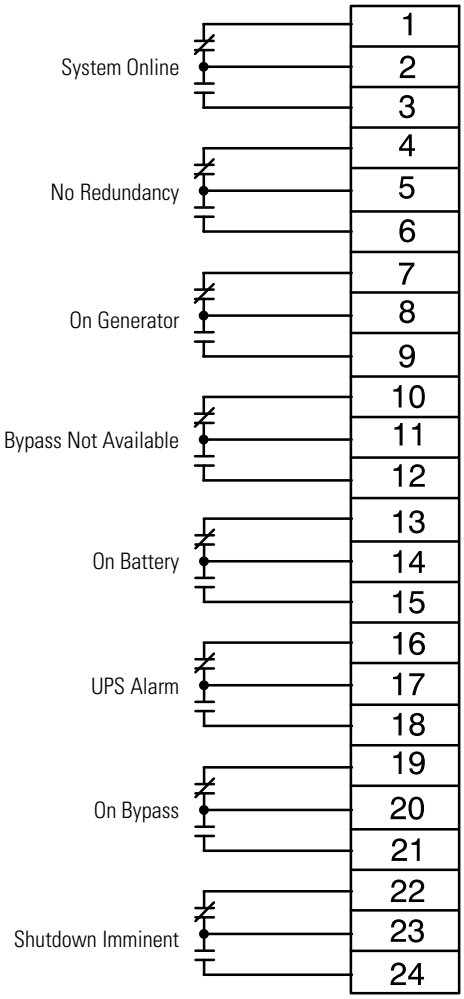


**Figure 5-11. Supervisory Contact Module II TB2**

***NOTE*** *Supervisory contacts are rated at 2.0A at 28 Vdc or 120 Vac and 0.15A at 115 Vdc.*

***NOTE*** *Supervisory contacts require an external power supply. Internal 24 Vdc is not capable of supplying contact current.*

## 5.7 Accessory Mounting Dimensions

Figure 5-12 through Figure 5-14 show the dimensions of the RMP II, the RIM II, and the SCM II.

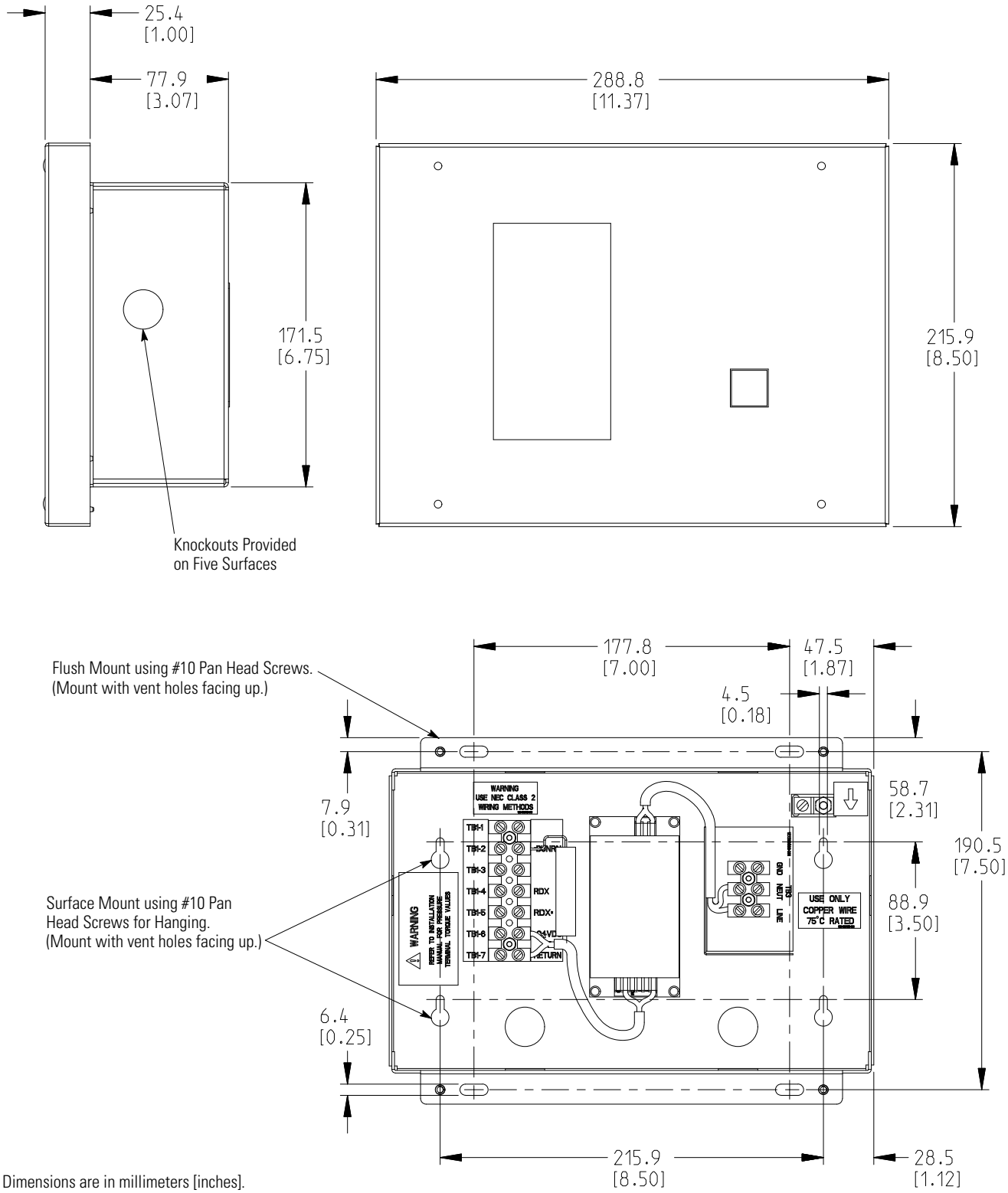


**Figure 5-12. Remote Monitor Panel II Dimensions**

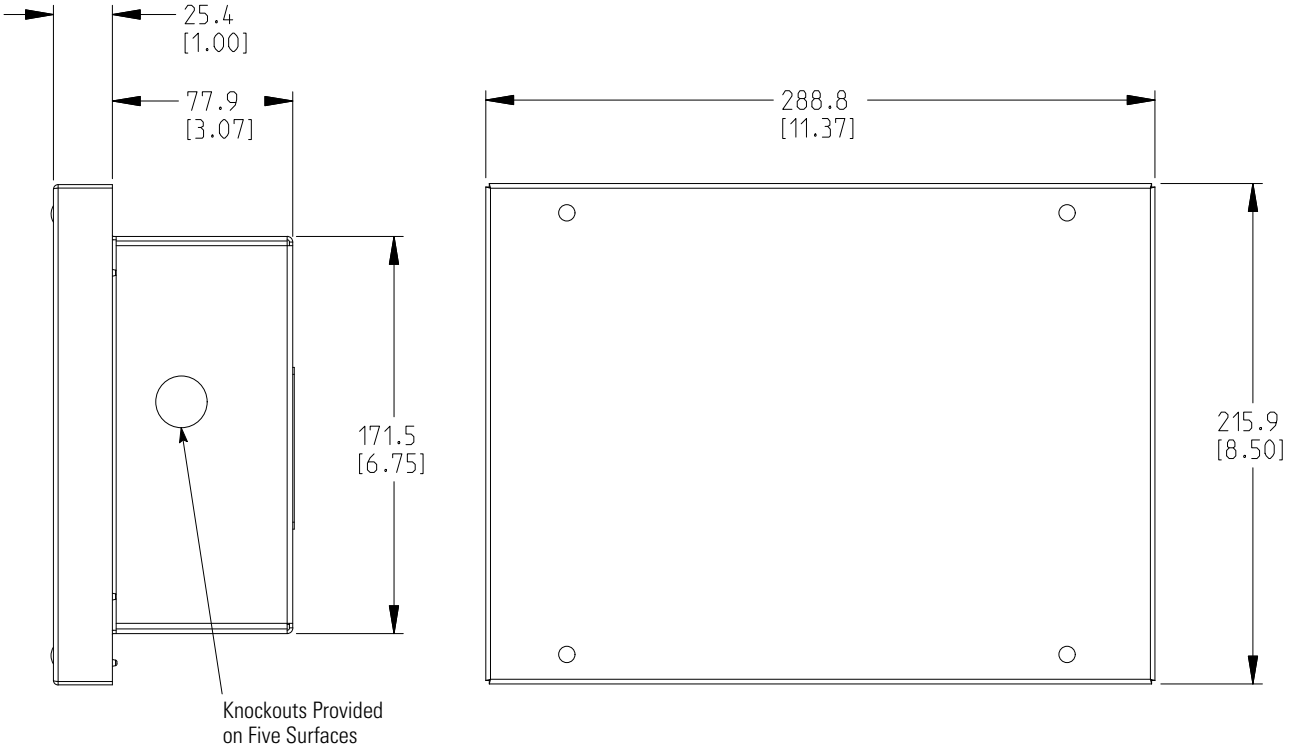


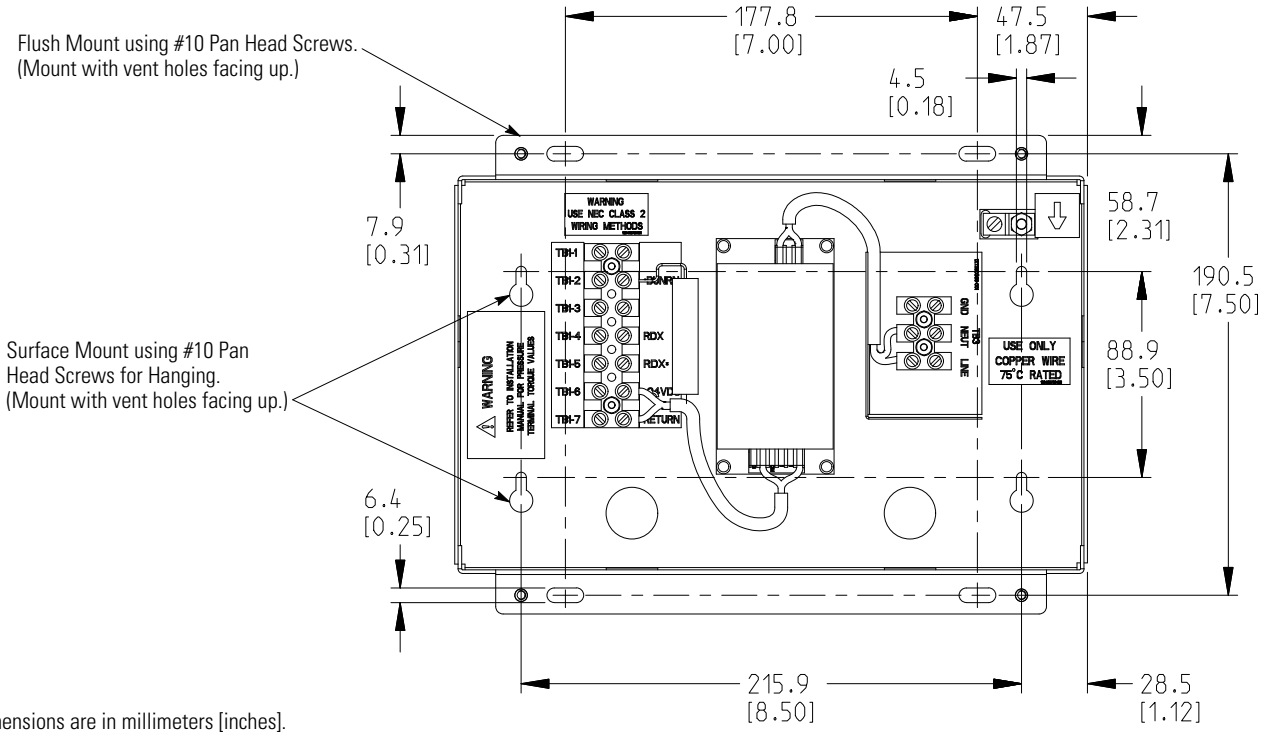


Dimensions are in millimeters [inches].

**Figure 5-13. Relay Interface Module II Dimensions**

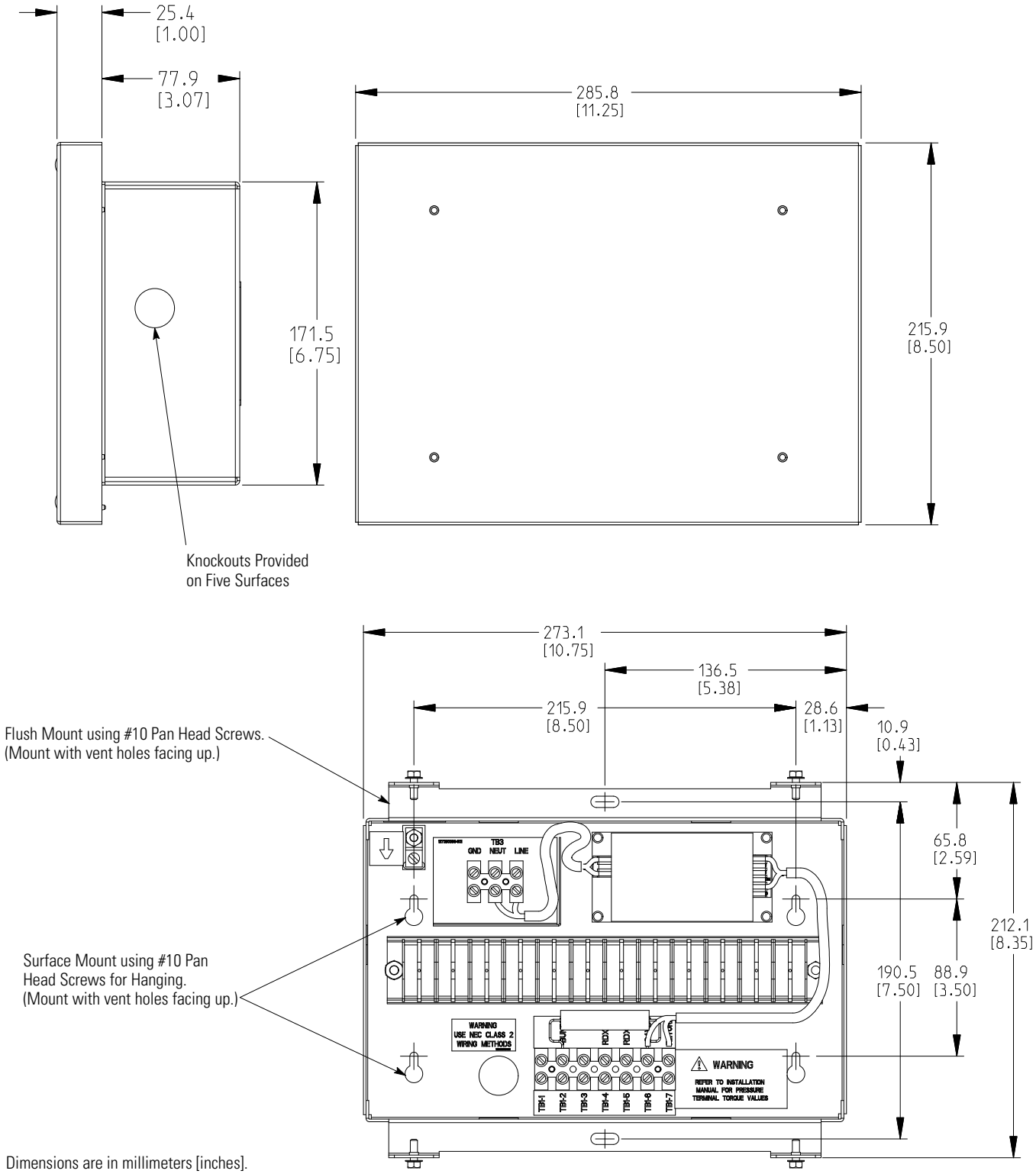


**Figure 5-14. Supervisory Contact Module II Dimensions**

This page intentionally left blank.

# Section II
# Operation

# Chapter 6 Understanding UPS Operation

## 6.1 UPS System Overview

The Power Xpert 9395 UPS is a continuous-duty, solid-state, transformerless (at 480 Vac), three-phase, true online system that provides conditioned and uninterruptible AC power to the UPS system's output and critical load.

The basic system consists of a rectifier, battery converter, inverter, monitoring/ operation control panel, integrated communication server, and digital signal processor (DSP) logic. Figure 6-1 shows the main elements of the UPS system.

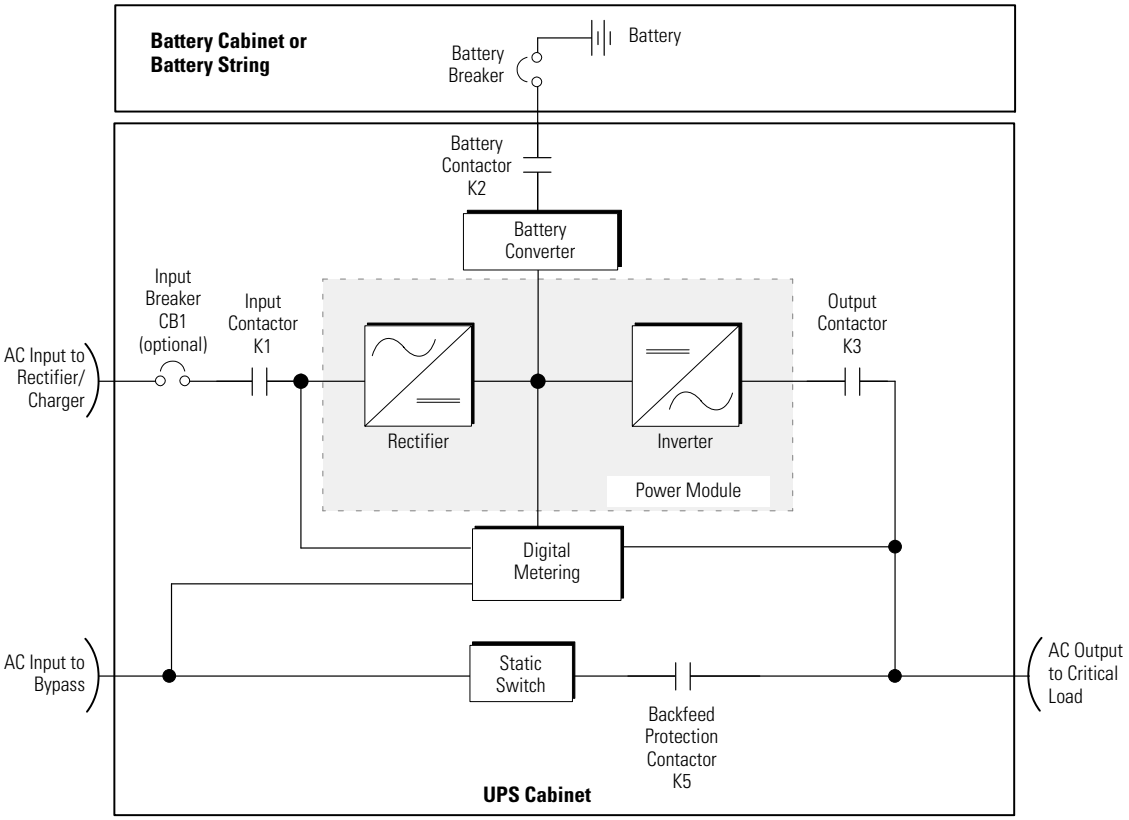


**Figure 6-1. Main Elements of the UPS System**

If utility power is interrupted or falls outside the parameters specified in Chapter 10, "Product Specifications," the UPS uses a *backup battery supply* to maintain power to the critical load for a specified period of time or until the utility power returns. For extended power outages, the UPS allows you to either transfer to an alternative power system (such as a generator) or shut down your critical load in an orderly manner.

The emergency bypass consists of a continuous-duty static switch and backfeed protection contactor K5. The backfeed protection contactor is located in series with the static switch. For manual transfers to bypass, the static switch is also used. The static switch is armed and ready during both types of transfers.

## 6.2 Single UPS

A single UPS operates independently to support an applied load from the inverter, providing conditioned and uninterruptible AC power to the critical load from the output of the module. During an outage, the inverter continues to operate, supporting power to the load from the battery supply. If the unit requires service, applied loads are transferred to the internal bypass, continuous-duty static switch either automatically or manually. With the exception of a battery cabinet, no other cabinets or equipment are required for the single UPS to successfully support its applied loads.

### 6.2.1 Modes

The Power Xpert 9395 UPS supports a critical load in five different modes of operation:

***NOTE*** *The Variable Module Management System and Energy Saver System modes are mutually exclusive.*

- In Online mode, the critical load is supplied by the inverter, which derives its power from rectified utility AC power. In this mode, the battery charger also provides charging current for the battery, if needed.
- In Energy Saver System (ESS) mode, commercial AC power is supplied directly to the critical load through the continuous static switch and transfers automatically to Online mode if an abnormal condition is detected.
- In Variable Module Management System (VMMS) mode, the UPS operates as a traditional double-conversion UPS, but selectively shifts the load to fewer UPMs to increase the efficiency of the UPS.
- In Bypass mode, the critical load is directly supported by utility power.
- In Battery mode, the battery provides DC power, which maintains inverter operation. The battery supports the critical load.

The following paragraphs describe the differences in the UPS operating modes, using block diagrams to show the power flow during each mode of operation.

### 6.2.2 Online Mode

Figure 6-2 shows the path of electrical power through the UPS system when the UPS is operating in Online mode.

During normal UPS operation, power for the system is derived from a utility input source through the rectifier input contactor K1. The front panel displays “Online,” indicating the incoming power is within voltage and frequency acceptance windows. Three-phase AC input power is converted to DC using IGBT devices to produce a regulated DC voltage to the inverter. When contactor K2 is closed the battery is charged directly from the regulated rectifier output through a buck or boost DC converter, depending on the system voltage and the size of the battery string attached to the unit.

The battery converter derives its input from the regulated DC output of the rectifier and provides either a boosted or bucked regulated DC voltage charge current to the battery. The battery is always connected to the UPS and ready to support the inverter should the utility input become unavailable.

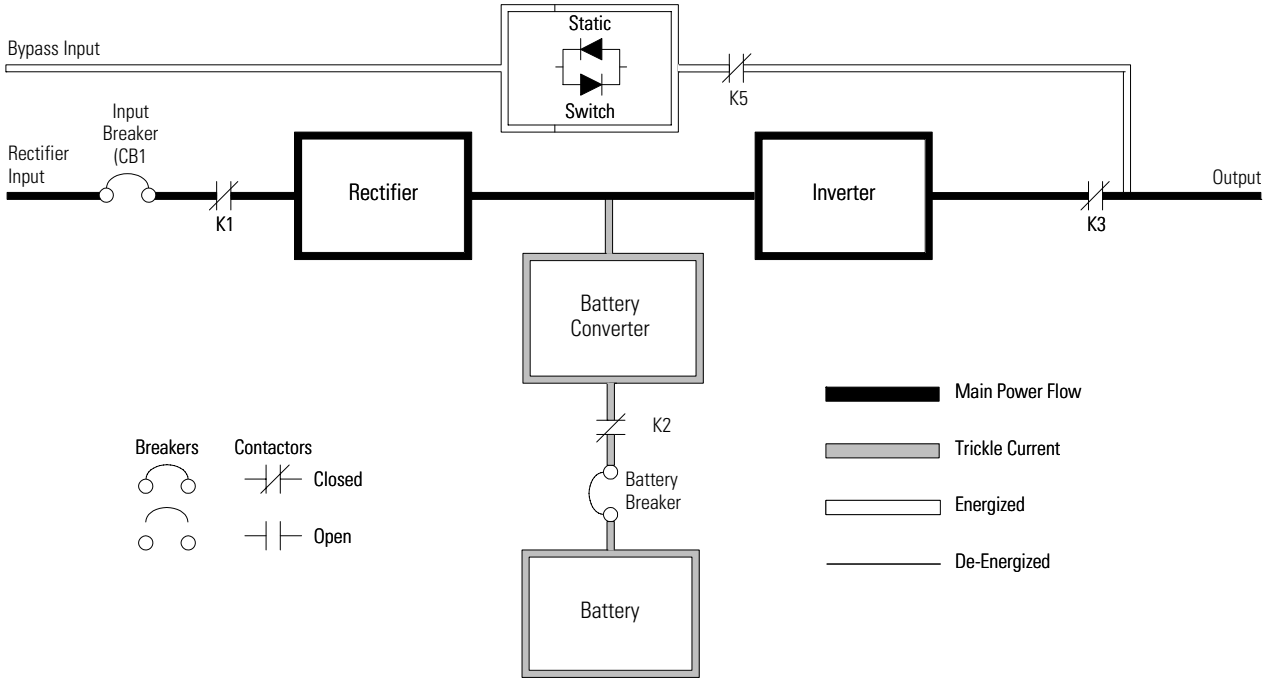


**Figure 6-2. Path of Current Through the UPS in Online Mode**

The inverter produces a three-phase AC output to a customer's load without the use of a transformer. The inverter derives regulated DC from the rectifier and uses IGBT devices and pulse-width modulation (PWM) to produce a regulated and filtered AC output. The AC output of the inverter is delivered to the system output through the output contactor K3.

If the utility AC power is interrupted or is out of specification, the UPS automatically switches to Battery mode to support the critical load without interruption. When utility power returns, the UPS returns to Online mode.

If the UPS becomes overloaded or unavailable, the UPS switches to Bypass mode. The UPS automatically returns to Online mode when the overload condition is cleared and system operation is restored within specified limits.

If the UPS suffers an internal failure, it switches automatically to Bypass mode and remains in that mode until the failure is corrected and the UPS is back in service.

### 6.2.3 Energy Saver System Mode

***NOTE*** *VMMS and ESS modes are mutually exclusive. If ESS mode is enabled, VMMS mode is disabled.*

When the UPS is operating in ESS mode, commercial AC power is supplied directly to the critical load through the continuous static switch. Power line filtering and spike protection for the load are provided by the input and output filter networks, and the UPS actively monitors the critical bus for power disturbances. When in this mode, the input and output contactors are closed and the link is maintained through the diode bridge.

If commercial power voltage or frequency disturbances are detected, the system forward transfers to Battery mode for minor disturbances and then to double-conversion mode for more severe disturbances. During a complete power outage, the transfer takes place within 2 ms to ensure loads being fed by the system output are not interrupted. All forward transfers transfer to Battery mode before returning to double-conversion mode.

In High Alert mode the unit transfers from ESS mode to double-conversion mode or if in double-conversion mode remains in double-conversion mode for a default time period of one hour (customer configurable). At the completion of the time period, the unit defaults back to ESS mode. If the High Alert command is received during the time period, the timer will be restarted.

ESS mode is a normal operating mode, and not an alarm condition. While the UPS is in this mode, the Online light on the front display will illuminate.

### 6.2.4 Harmonic Reduction System (HRS)

The Harmonic Reduction system mode of the 9395 UPS allows the UPS to actively reduce the input Total Demand Distortion (TDD) and increase the input power factor while maintaining high efficiency operation in ESS mode. The UPS uses one of its UPMs to perform this active harmonic cancellation.

***NOTE*** *Total Demand Distortion as defined by IEEE 519-1992 is the total root-sum-square harmonic current distortion, in percent, of the maximum demand load current (the nameplate rating of a fully rated UPS).*

HRS is a normal operating mode, not an alarm condition. The NORMAL light appears on the front of the UPS. In HRS, the inverter is ON, the rectifier is OFF and the output contactor is CLOSED.

HRS mode uses an extra set of sensors (CTs) on the output bus of the unit. These sensors measure the harmonics created by loads attached to the UPS output and the system actively reduces these harmonics.

If the bypass source falls outside of a predetermined voltage or frequency level, the system forward transfers to Battery mode and then to Normal mode with the inverter assuming the load. This transfer takes place within two milliseconds to ensure loads being fed by the system output are not interrupted. All forward transfers go to Battery mode before returning to Normal mode.

### 6.2.5 Variable Module Management System

***NOTE*** *VMMS is only available for single module systems when installed as a parallel configuration.*

***NOTE*** *VMMS and ESS modes are mutually exclusive. If VMMS mode is enabled, ESS mode is disabled.*

In VMMS mode, the UPS operates as a traditional double-conversion UPS. However, the UPS will selectively shift the load to fewer UPMs based on the required load in order to force the remaining UPMs to carry a higher load. The efficiency rating for each UPM is highest when loads are greater than 50% of the system rating. Therefore, with multiple UPMs, a UPS can achieve higher efficiencies for lighter loads.

When a UPM is placed into VMMS mode, the UPM will stop gating the inverter and rectifier and keep the output contactor closed in order to maintain voltage match and phase lock to the critical bus. In this mode the UPS actively monitors the critical bus, keeping the UPM input contactors closed in order to keep the DC link primed (through the rectifier diodes) and also to allow the UPM to immediately return to active mode in the event of a disturbance or load step on the critical bus.

VMMS limits the maximum power available from a UPM when in VMMS mode. The default setting is 80% of the UPM full power rating. If the limit is exceeded, additional UPMs take on the increased load. The VMMS redundancy setting sets the number of redundant UPMs that the customer requires. Both the VMMS UPM load limit and UPM redundancy are customer configurable.

VMMS's UPM automatic scheduling rotates the idle UPMs every month with the ABM cycle. This allows the UPMs to have equal load-share time and also conducts a periodic UPM readiness test. The automatic ABM scheduler selects the next UPM in turn after each charge-to-float transition. If ABM is disabled, the scheduler selects the next UPM after conducting the automatic battery test. If ABM and automatic battery tests are disabled, the scheduler selects the next UPM at the beginning of each month.

In High Alert mode, the UPS defaults to double-conversion Online mode and all UPMs go active for one hour (customer configurable). At the completion of the hour, the UPS defaults back to VMMS mode. If the High Alert command is received during the one hour, the one hour timer will be restarted.

### 6.2.6 Bypass Mode

The UPS automatically switches to Bypass mode if it detects an overload, load fault, or internal failure. The UPS can also be transferred from Online mode to Bypass mode manually. The bypass source supplies the commercial AC power to the load directly. Figure 6-3 shows the path of electrical power through the UPS system when operating in Bypass mode.

**CAUTION**

The critical load is not protected from voltage or frequency fluctuations or power outages while the UPS is in Bypass mode.

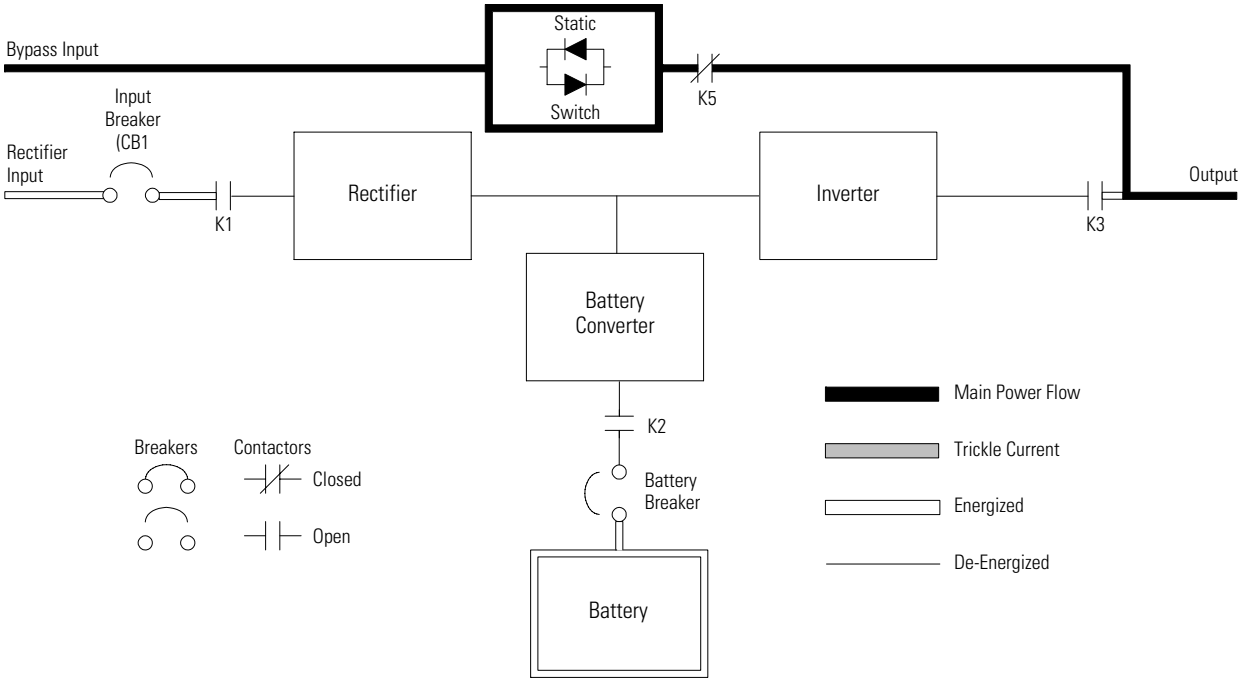


**Figure 6-3. Path of Current Through the UPS in Bypass Mode**

In Bypass mode, the output of the system is provided with three-phase AC power directly from the system input. While in this mode, the output of the system is not protected from voltage or frequency fluctuations or power outages from the source. Some power line filtering and spike protection is provided to the load but no active power conditioning or battery support is available to the output of the system in the Bypass mode of operation.

The internal bypass is comprised of a solid-state, silicon-controlled rectifier (SCR) static switch (SSW) and a backfeed protection contactor K5. The static switch is rated as a continuous-duty device that is used anytime the inverter is unable to support the applied load. The static switch is wired in series with the backfeed protection contactor, and together they are wired in parallel with the rectifier and inverter.

The static switch, being an electronically-controlled device, can be turned on immediately to pick up the load from the inverter while the inverter output contactor K3 opens to isolate the inverter. The backfeed protection contactor is normally always closed, ready to support the static switch unless the bypass input source becomes unavailable.

If the UPS transfers to Bypass mode from Online mode due to any reason other than operator intervention, the UPS automatically attempts to transfer back to Online mode (up to three times within a ten minute period). The fourth transfer locks the critical load to the bypass source and requires operator intervention to transfer.

### 6.2.7 Battery Mode

The UPS automatically transfers to Battery mode if a utility power outage occurs, or if the utility power does not conform to specified parameters. In Battery mode, the battery provides emergency DC power that the inverter converts to AC power.

Figure 6-4 shows the path of electrical power through the UPS system when operating in Battery mode.

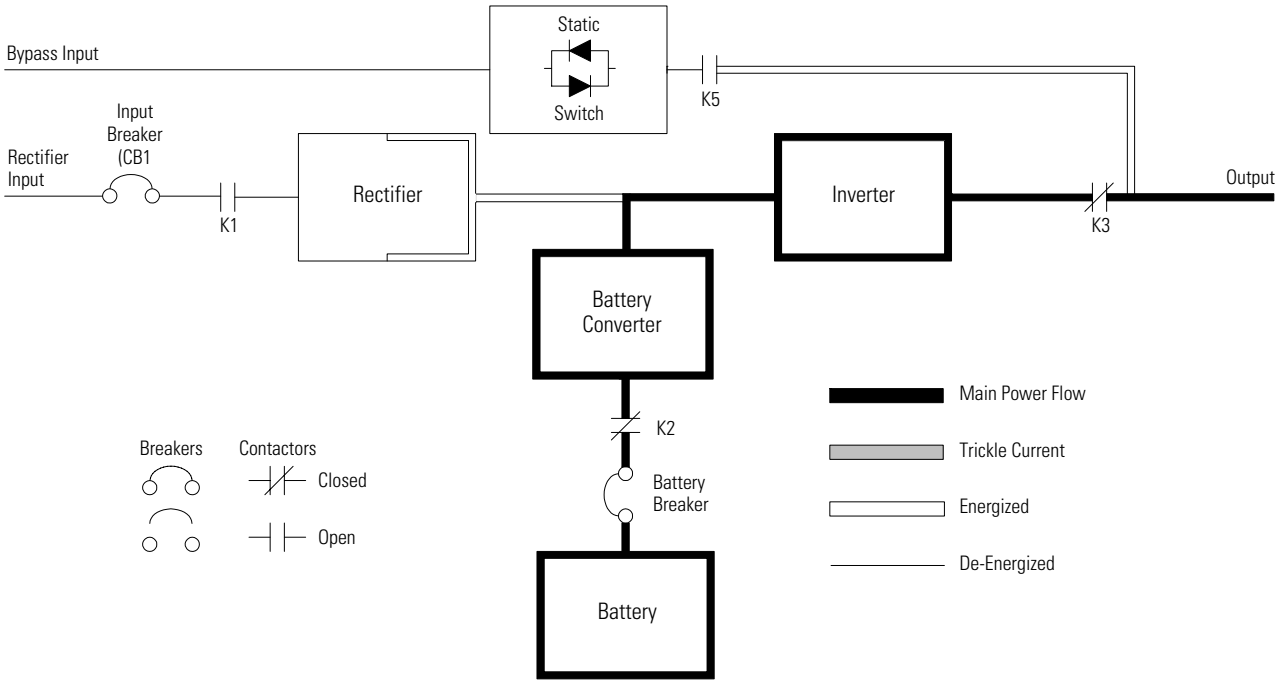


**Figure 6-4. Path of Current Through the UPS in Battery Mode**

During a utility power failure, the rectifier no longer has an AC utility source from which to supply the DC output current required to support the inverter. The input contactor K1 opens and the battery instantaneously supplies energy to the battery converter. The converter either bucks or boosts the voltage so that the inverter can support the customer's load without interruption. If bypass is common with the rectifier input, the backfeed protection contactor K5 also opens. The opening of contactors K1 and K5 prevent system voltages from bleeding backwards through the static switch and rectifier snubber components and re-entering the input source.

If the input power fails to return or is not within the acceptance windows required for normal operation, the battery continues discharging until a DC voltage level is reached where the inverter output can no longer support the connected loads. When this event occurs, the UPS issues another set of audible and visual alarms indicating SHUTDOWN IMMINENT. Unless the rectifier has a valid AC input soon, the output can be supported for only two minutes before the output of the system shuts down. If the bypass source is available, the UPS transfers to bypass instead of shutting down.

If at any time during the battery discharge the input power becomes available again, contactors K1 and K5 close and the rectifier begins to supply DC current to the converter and inverter. At this point, the unit returns to Online mode. Depending on the total load and the duration of the battery discharge, battery current limit alarms may be seen for a short time due to the current required to recharge the battery.

## 6.3 Single UPS System Oneline Configurations

The system oneline drawings in this section show the simplified internal structure of the UPS, battery supply, and basic maintenance bypass.

| Oneline Drawing | UPS Model | Voltage | | System Type |
|---|---|---|---|---|
| | | Input | Output | |
| Figure 6-5 on page 6-9 | 9395-250/228<br>9395-275/225<br>9395-275/275 | 400<br>480 | 400<br>480 | Single Reverse Transfer UPS – One UPM, Common Rectifier Feed, Dual-Feed Configuration |
| Figure 6-6 on page 6-10 | 9395-250/228<br>9395-275/225<br>9395-275/275 | 400<br>480 | 400<br>480 | Single Reverse Transfer UPS – Two UPM, Common Rectifier Feed, Common Battery, Dual-Feed Configuration |
| Figure 6-7 on page 6-11 | 9395-250/228<br>9395-275/225<br>9395-275/275 | 400<br>480 | 400<br>480 | Single Reverse Transfer UPS – Two UPM, Common Rectifier Feed, Separate Battery, Dual-Feed Configuration |
| Figure 6-8 on page 6-12 | 9395-250/228<br>9395-275/225<br>9395-275/275 | 400<br>480 | 400<br>480 | Single Reverse Transfer UPS – Two UPM, Separate Rectifier Feed, Separate Battery, Dual-Feed Configuration |
| Figure 6-9 on page 6-13 | 9395-250/228<br>9395-275/225<br>9395-275/275 | 400<br>480 | 400<br>480 | Simplified Dual-Fed UPS with Maintenance Bypass Panel |

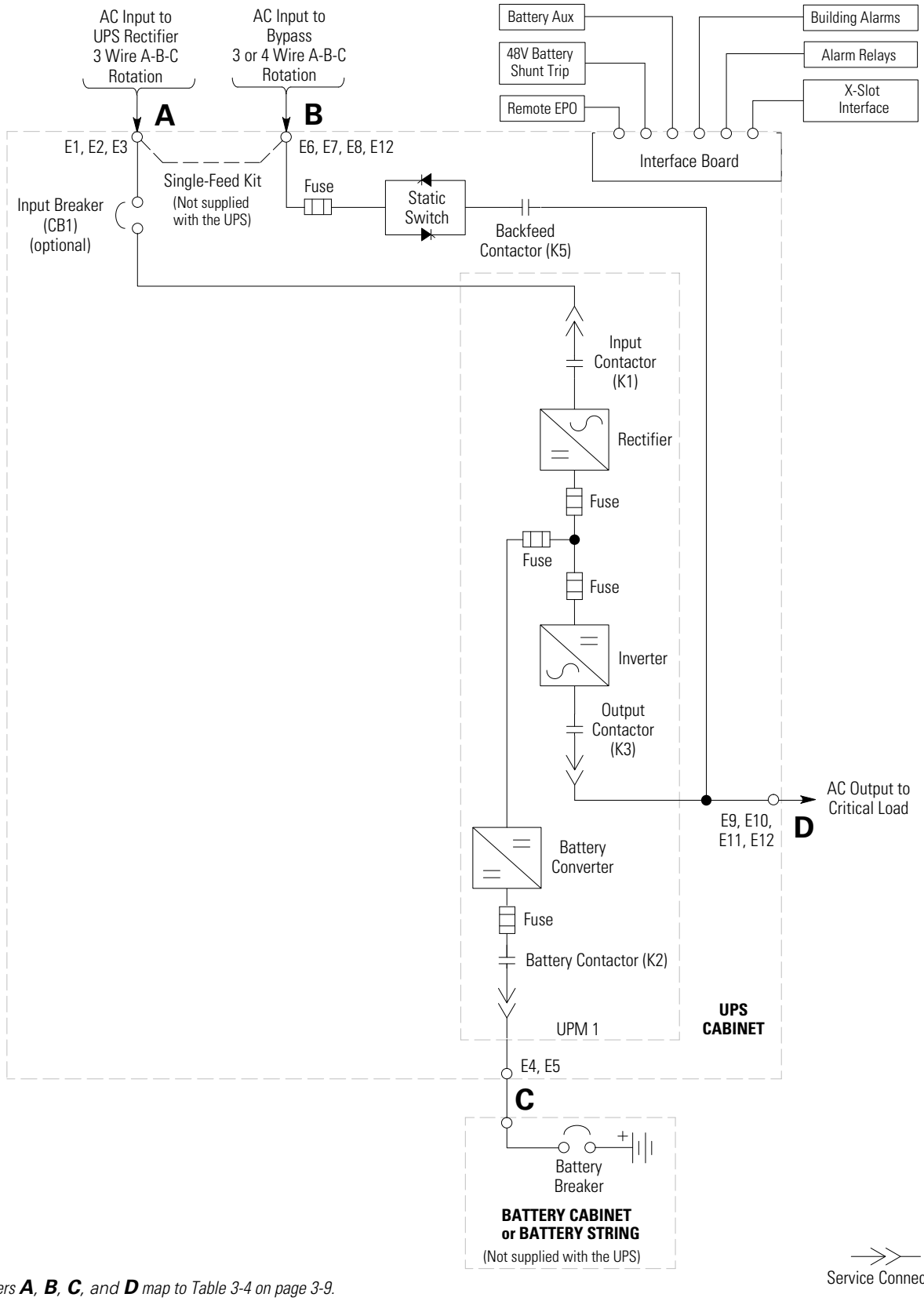


**NOTE** *Callout letters **A**, **B**, **C**, and **D** map to Table 3-4 on page 3-9.*

**NOTE** *If the load requires a neutral, a bypass source neutral must be provided. DO NOT install both a source neutral and a bonding jumper.*

**Figure 6-5. UPS System – Common Rectifier Feed, Dual-Feed Configuration**

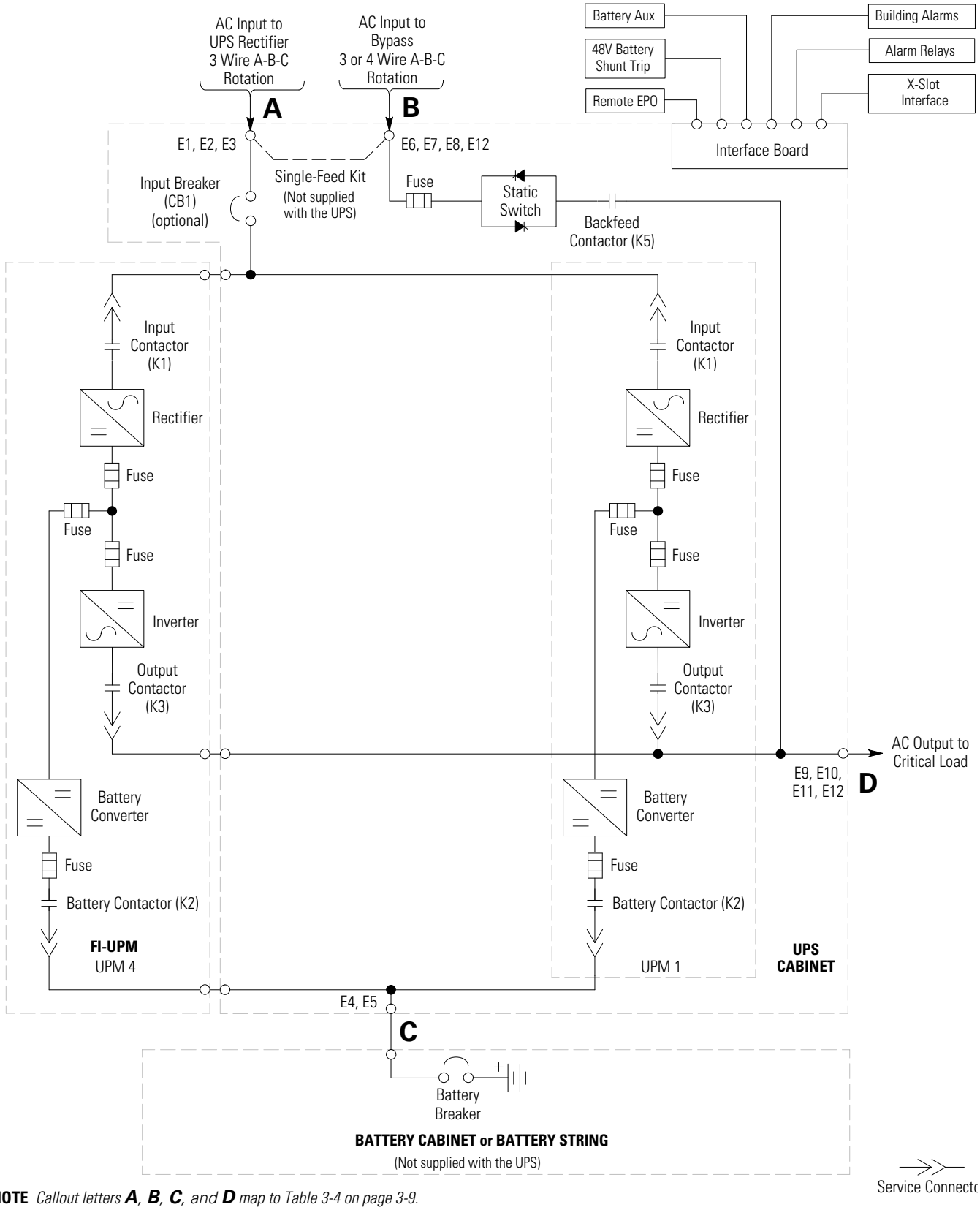


**NOTE** *Callout letters **A**, **B**, **C**, and **D** map to Table 3-4 on page 3-9.*

**NOTE** *If the load requires a neutral, a bypass source neutral must be provided. DO NOT install both a source neutral and a bonding jumper.*

**Figure 6-6. UPS System with Field Installed UPM – Common Rectifier Feed, Common Battery, Dual-Feed Configuration**

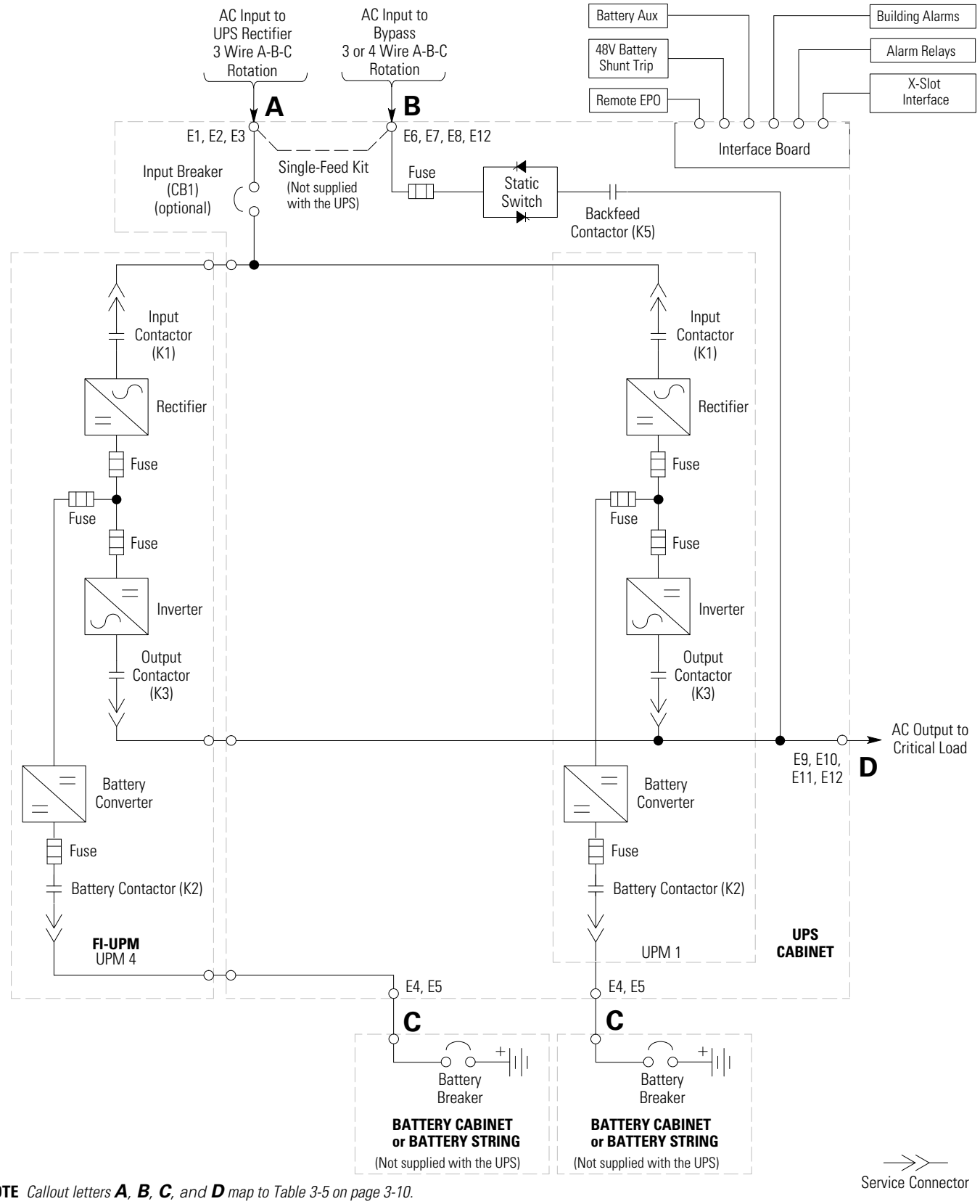


**NOTE** *Callout letters **A**, **B**, **C**, and **D** map to Table 3-5 on page 3-10.*

**NOTE** *If the load requires a neutral, a bypass source neutral must be provided. DO NOT install both a source neutral and a bonding jumper.*

**Figure 6-7. UPS System with Field Installed UPM – Common Rectifier Feed, Separate Battery, Dual-Feed Configuration**

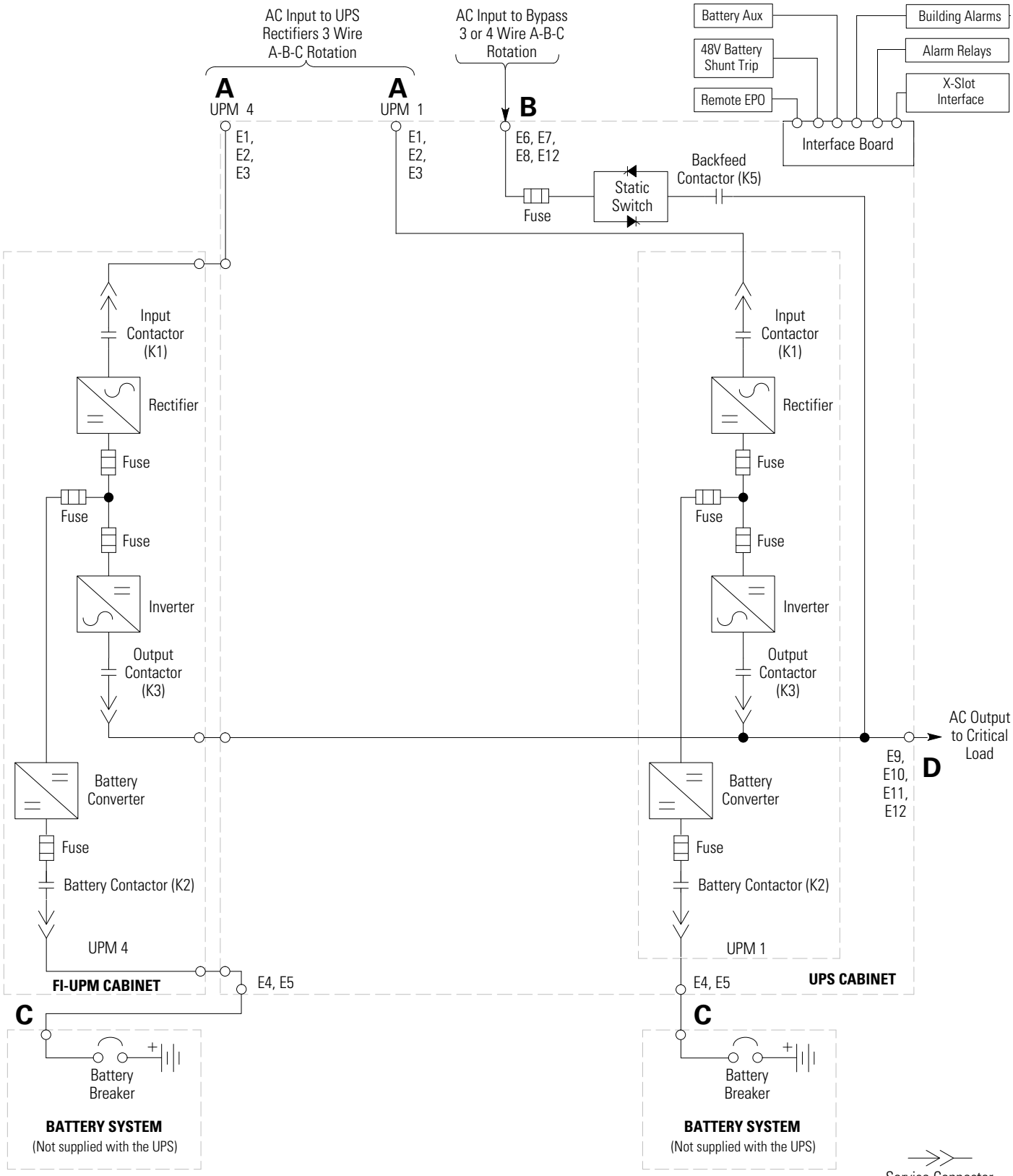


**NOTE** *Callout letter **A** maps to Table 3-6 on page 3-11. Callout letters **B**, **C**, and **D** map to Table 3-5 on page 3-10.*

**NOTE** *If the load requires a neutral, a bypass source neutral must be provided. DO NOT install both a source neutral and a bonding jumper.*

**Figure 6-8. UPS System with Field Installed UPM – Separate Rectifier Feed, Separate Battery, Dual-Feed Configuration**

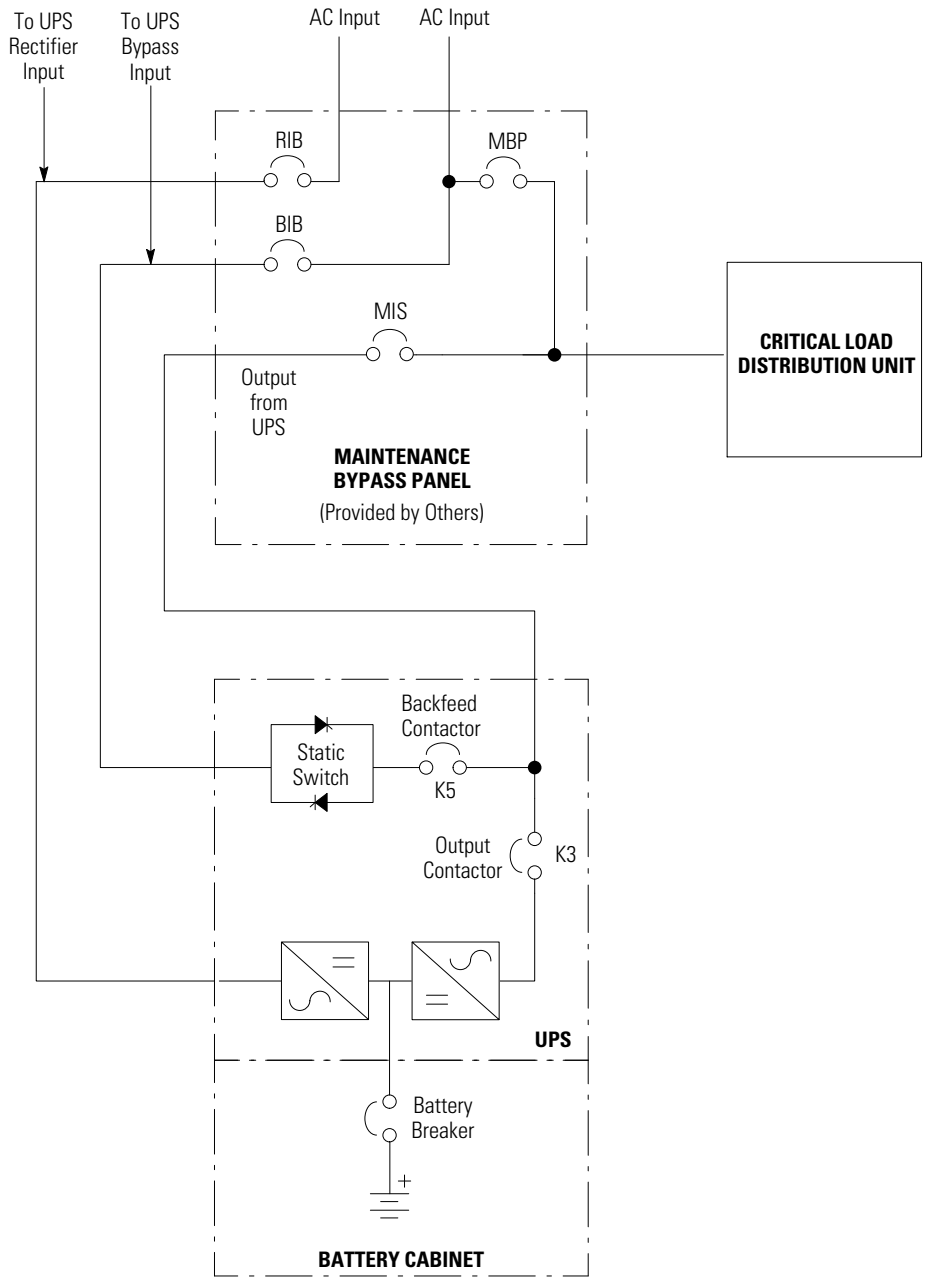


RIB: Rectifier Input Breaker
BIB: Bypass Input Breaker
MIS: Maintenance Isolation Breaker
MBP: Maintenance Bypass Breaker

**NOTE** *If installing a maintenance bypass, a minimum of two separate feeds with upstream feeder breakers, or a single feed with two upstream feeder breakers, must be provided: one for the UPS or rectifier input breaker (RIB) (if installed) and one for the maintenance bypass input. DO NOT use a single feed or a single feeder breaker to supply both the UPS or RIB and the maintenance bypass. If a bypass input breaker (BIB) is installed in the maintenance bypass and a single-feed UPS is being installed, a single feed to the maintenance bypass is acceptable for supplying both the UPS and the bypass.*

**Figure 6-9. Simplified Dual-Feed UPS with Maintenance Bypass Panel**

## 6.4 Multiple UPS Distributed Bypass System

Distributed bypass parallel operation extends the normal operation of Power Xpert 9395 UPSs by offering increased capacity and/or redundant capability. The parallel system continues to maintain power to the critical loads during commercial electrical power brownout, blackout, overvoltage, undervoltage, and out-of-tolerance frequency conditions.

The output of the system is normally supplied by Uninterruptible Power Modules (UPMs) contained in each UPS. Multiple UPMs are connected with their outputs in parallel (tied together) to provide a load level greater than the rating of one UPM and/or for redundancy. The paralleled UPMs supply the output load with protected power as long as the load does not exceed the combined rating of the paralleled UPMs.

The power system is redundant as long as one of the UPMs can be disconnected from the output bus and the remaining UPMs can continue to supply power to the load without exceeding their ratings.

When the load is being supplied by the UPMs, the system output bus is continuously monitored for an overvoltage or undervoltage condition. If an out of limits condition is detected, the paralleled UPMs transfer the load to bypass using the UPS static switches.

Communication is required between the UPSs for system metering and mode control. System level communication and control are accomplished using a Controller Area Network (CAN). A single building alarm in each UPS, connected to the other UPSs in parallel and tied to the bypass contactor auxiliary contacts in each UPS, are used for a secondary communication path. This arrangement ensures bypass control even if the CAN bus is lost.

The system is paralleled for redundancy (1+1) in a system where two UPMs are paralleled together and the load is less than the supporting capability of one of the UPMs. The system is paralleled for capacity (2+0) if both UPMs in a system are required to support the load.

A parallel capacity system can also be redundant (2+1), as long as there is always one or more UPMs online than required to support the load.

### 6.4.1 Multiple UPS Parallel System Modes

Similar to the single UPS system, the Power Xpert 9395 UPS parallel system supports a critical load in five different modes of operation. The standard operation modes are:

***NOTE*** *The Variable Module Management System and Energy Saver System modes are mutually exclusive.*

- In Online mode, the paralleled UPMs supply the critical load with clean, filtered power. Each UPM battery charger also provides charging current for the battery if needed.
- In ESS mode, commercial AC power is supplied directly to the critical load through the continuous static switch and transfers automatically to Online mode if an abnormal condition is detected. ESS mode in a parallel system operates the same as it does in a single UPS system (see paragraph 6.2.3).
- In VMMS mode, the UPS operates as a traditional double-conversion UPS, but selectively shifts the load to fewer UPMs to increase the efficiency of the UPS. In a parallel system each UPS will require at least one UPM to be in double-conversion mode at all times; otherwise, VMMS mode operates the same as it does in a single UPS system (see paragraph 6.2.5).

- In Bypass mode, the critical load is directly supported by utility power through the bypass circuit in each UPS.
- In Battery mode, the battery provides DC power, which maintains UPM operation. The UPM batteries support the critical load.

The UPSs continually monitor themselves and the incoming utility power and automatically switch between these modes as required, without operator intervention, except when manually switching to Bypass mode. The sophisticated detection and switching logic inside the UPSs ensures that operating mode changes are automatic and transparent to the critical load, while internal monitoring systems indicate the current mode of operation. The UPSs switch operating modes in response to these system events:

- A *command* is an intervention that is externally initiated by an operator or by some site action. A command causes the UPSs to switch operating modes; it usually does not require any further action.
- A *notice* is a minor system event that may or may not require attention.
- An *alarm* is a system event that requires immediate intervention.

The following paragraphs describe the differences in the parallel system operating modes, using block diagrams to show the power flow during each mode of operation.

### 6.4.2 Online Mode – Distributed Bypass

In Online mode, utility AC power is supplied to the UPSs. Each UPS then conditions the incoming AC power and provides clean, regulated AC power to the tie cabinet or distribution panel for parallel systems up to four modules. The applied load is shared equally among the available UPMs in the system.

Figure 6-10 shows the path of electrical power through the parallel system when operating in Online mode.

If the utility AC power is interrupted or is out of specification, the UPSs automatically switch to Battery mode to support the critical load without interruption. When utility power returns, the UPSs return to Online mode.

If the UPSs become overloaded or unavailable, the distributed bypass system switches to Bypass mode. The distributed bypass system automatically returns to Online mode when the overload condition is cleared and system operation is restored within specified limits.

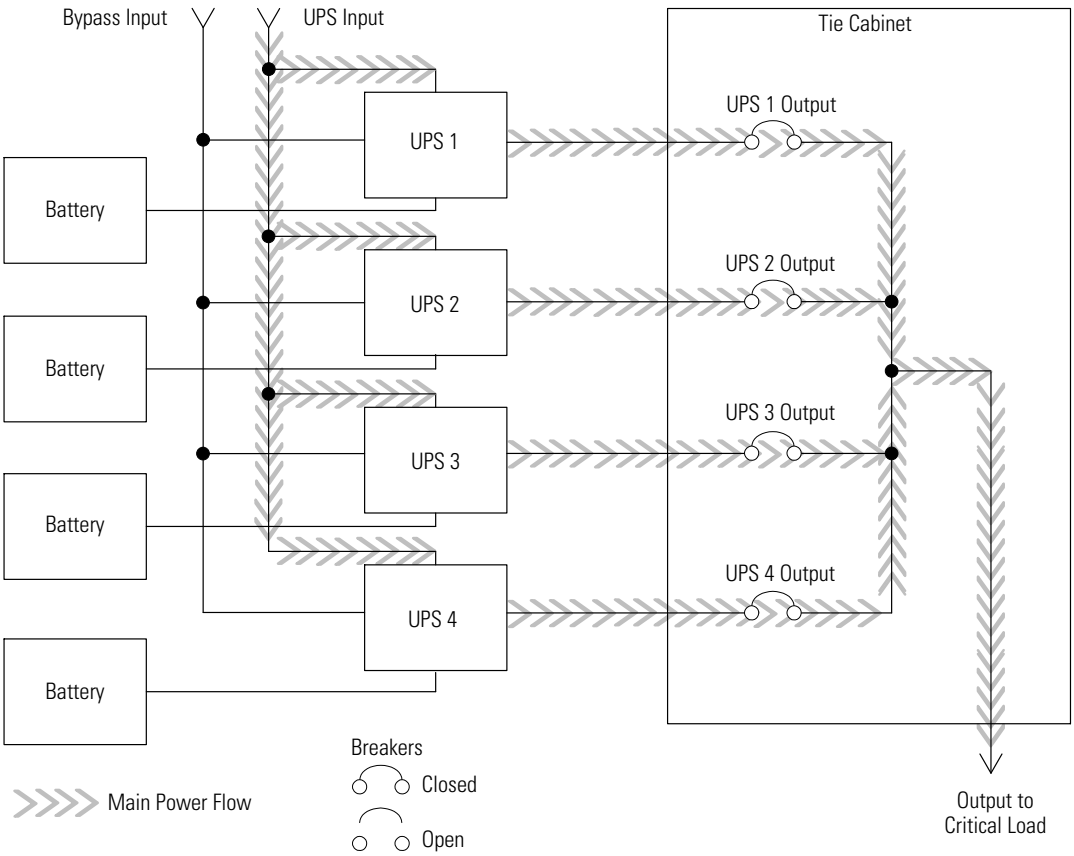


**Figure 6-10. Path of Current through the UPSs in Online Mode – Distributed Bypass**

### 6.4.3 Bypass Mode – Distributed Bypass

In Bypass mode, the output of the system is provided with three-phase AC power directly from the bypass input. While in this mode, the output of the system is not protected from fluctuations, spikes, or power outages from the source. No battery support is available to the output of the system in the Bypass mode of operation.

The distributed bypass system automatically switches to Bypass mode if it detects a UPS system overload or load fault.

If one UPS becomes unavailable, the distributed bypass system dynamically updates the redundancy calculation to determine if the remaining UPSs can support the load. If the load can be supported, the system does not switch to bypass.

Figure 6-11 shows the path of electrical power through the parallel system when operating in Bypass mode.

In a distributed bypass system, each UPS operates similar to a single UPS, but in parallel with each other. The bypass source for the load is derived from the bypass input of one, two, three, or four UPSs, depending on the system configuration, through the internal static switches. If a module is taken offline, the other modules remain online to support the load. If more modules than can support the load must be taken offline, the load must be transferred to maintenance bypass or shut down.

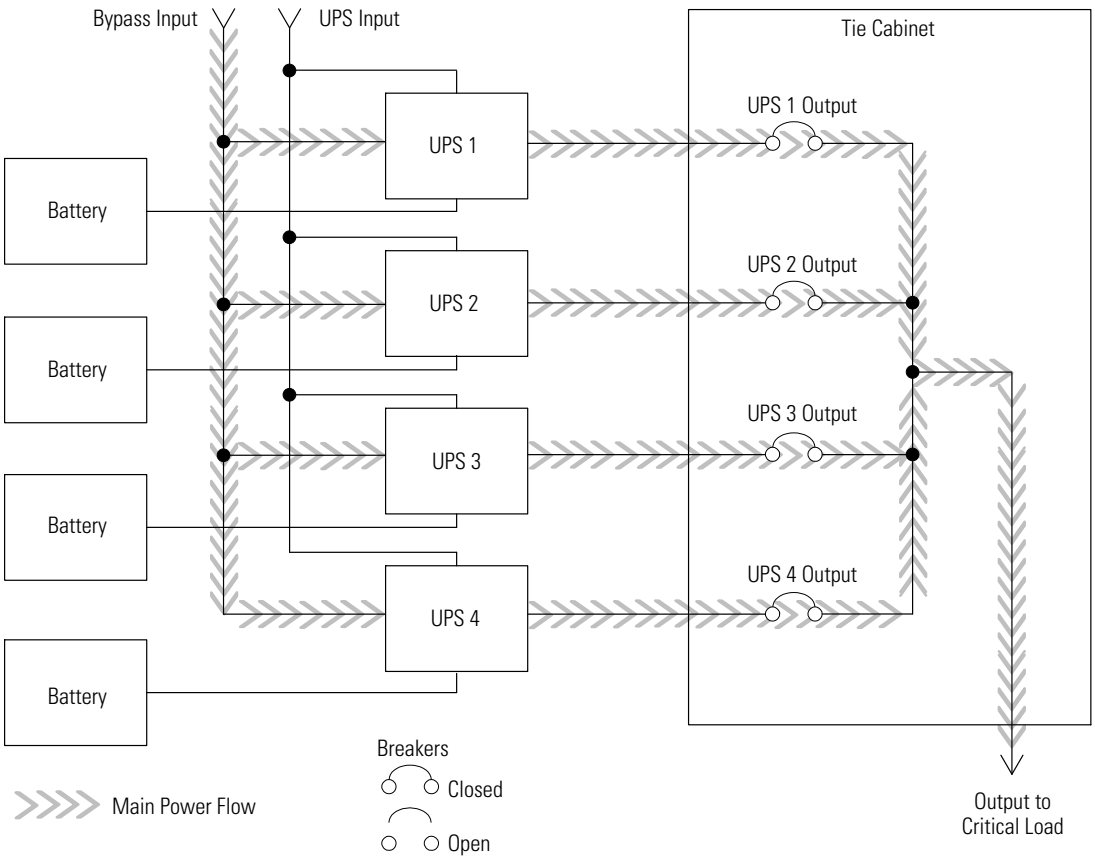


**Figure 6-11. Path of Current through the UPSs in Bypass Mode – Distributed Bypass**

The distributed bypass system can be transferred from Online mode to Bypass mode manually. However, the distributed bypass system automatically switches to Bypass mode whenever the UPSs can no longer supply the critical load. If the distributed bypass system transfers to Bypass mode from Online mode due to an output voltage deviation, the distributed bypass system automatically attempts to return to Online mode (up to three times within a 10-minute period). After three transfer attempts or an overload, the system locks the critical load to the bypass source and requires operator intervention to transfer.

Bypass mode is a normal operating mode, not an alarm condition. However, if the distributed bypass system is unable to return to Online mode following an automatic transfer to Bypass mode, an alarm condition is recorded.

Bypass may also be used when the UPSs or UPMs in the system must be shut down to perform routine maintenance or repairs.

In the Parallel Redundant (N+1) arrangement, the bypass circuitry in each UPS operates to support the applied loads on bypass. If the UPSs are online and one UPS trips offline, the remaining UPSs do not go to bypass as long as they have the capacity to support the load.

In the Parallel Capacity (N+0) arrangement, if one UPS trips offline and goes to bypass, the remaining UPSs also go to bypass.

### 6.4.4 Battery Mode – Distributed Bypass

The UPSs transfer to Battery mode automatically if a utility power outage occurs, or if the utility power does not conform to specified parameters. In Battery mode, the battery provides emergency DC power that the inverter converts to AC power.

Figure 6-12 shows the path of electrical power through the distributed bypass system when operating in Battery mode.

While in Battery mode, the UPSs sound an audible horn, illuminate visual indicator lamps on the front panel (Online and On Battery), and create an entry into the alarm event history. As the battery discharges, the boost converter and inverter constantly make minute adjustments maintaining a steady output. The UPSs remain in this operating mode until the input power to the rectifier is again within the specified voltage or frequency acceptance windows.

If the input power fails to return or is not within the acceptance windows required for normal operation, the battery continues discharging until a DC voltage level is reached where the inverter output can no longer support the shared loads. When this event occurs, each UPS issues another set of audible and visual alarms that indicate a two-minute SHUTDOWN IMMINENT warning. Unless the system has a valid AC input soon, redundant UPMs begin shutting down until there are no longer enough UPMs online to support the connected load. When this event occurs, the system shuts down. If the bypass source is available, the system transfers to bypass instead of shutting down.

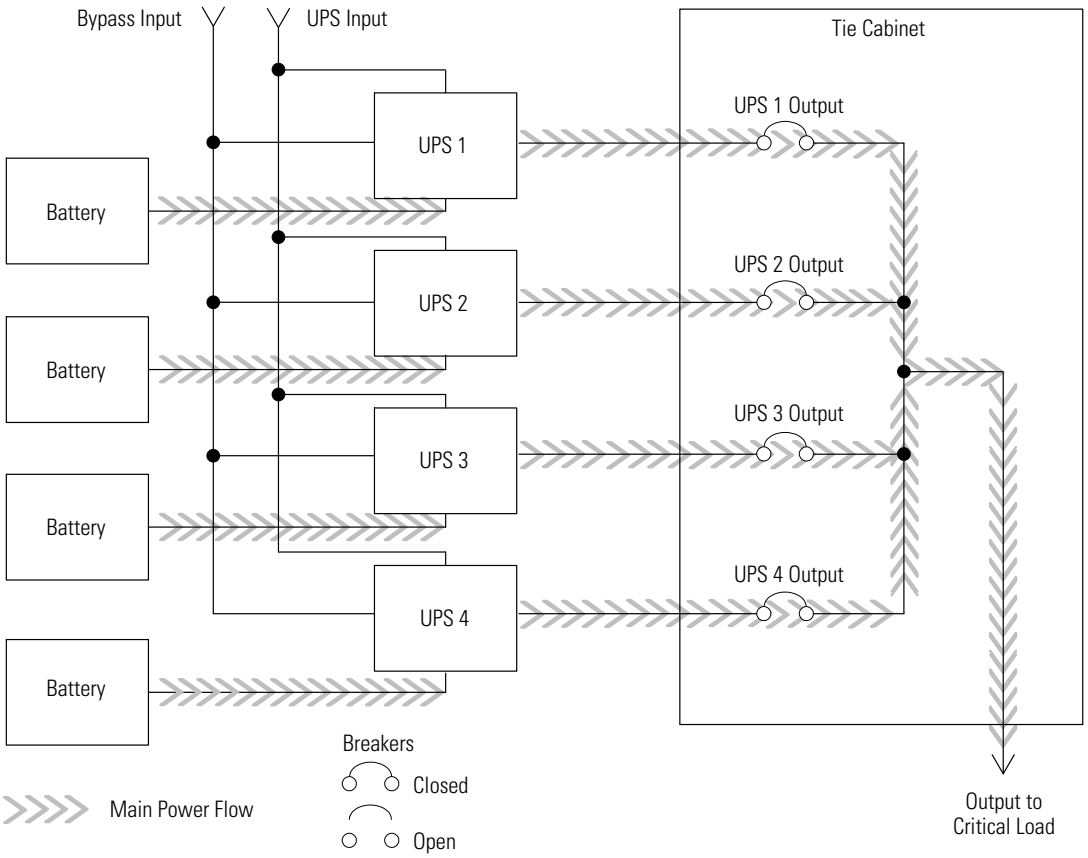


**Figure 6-12. Path of Current through the UPSs in Battery Mode – Distributed Bypass**

If at any time during the battery discharge the input power becomes available again, the rectifier begins to supply DC current to the inverter. At this point, the UPS returns to Online mode. If at any time during the battery discharge the AC input power becomes available again, each rectifier turns on, assumes the inverter load from the batteries, and begins recharging the batteries. Depending on the total load and the duration of the battery discharge, battery and rectifier input current limit alarms may be seen for a short time due to the current required to recharge the batteries.

## 6.5 Multiple UPS Distributed Bypass System Oneline Configurations

The distributed bypass system oneline drawings in this section show the simplified internal structure of the UPS, battery supply, and basic maintenance bypass in a multiple UPS configuration. These onelines do not show each UPM in the UPSs, but represent each UPS in the distributed bypass system. The internal structure of each UPS is shown in Figure 6-5 through Figure 6-8.

| Oneline Drawing | UPS Model | Voltage | | System Type |
|---|---|---|---|---|
| | | Input | Output | |
| Figure 6-13 on page 6-20 | 9395-250/228<br>9395-275/225<br>9395-275/275 | 400<br>480 | 400<br>480 | Multiple UPS – Distributed Bypass<br>1+1 and 2+0 Configurations |
| Figure 6-14 on page 6-21 | 9395-250/228<br>9395-275/225<br>9395-275/275 | 400<br>480 | 400<br>480 | Multiple UPS – Distributed Bypass<br>2+1 and 3+0 Configurations |
| Figure 6-15 on page 6-22 | 9395-250/228<br>9395-275/225<br>9395-275/275 | 400<br>480 | 400<br>480 | Multiple UPS – Distributed Bypass<br>3+1 and 4+0 Configurations |

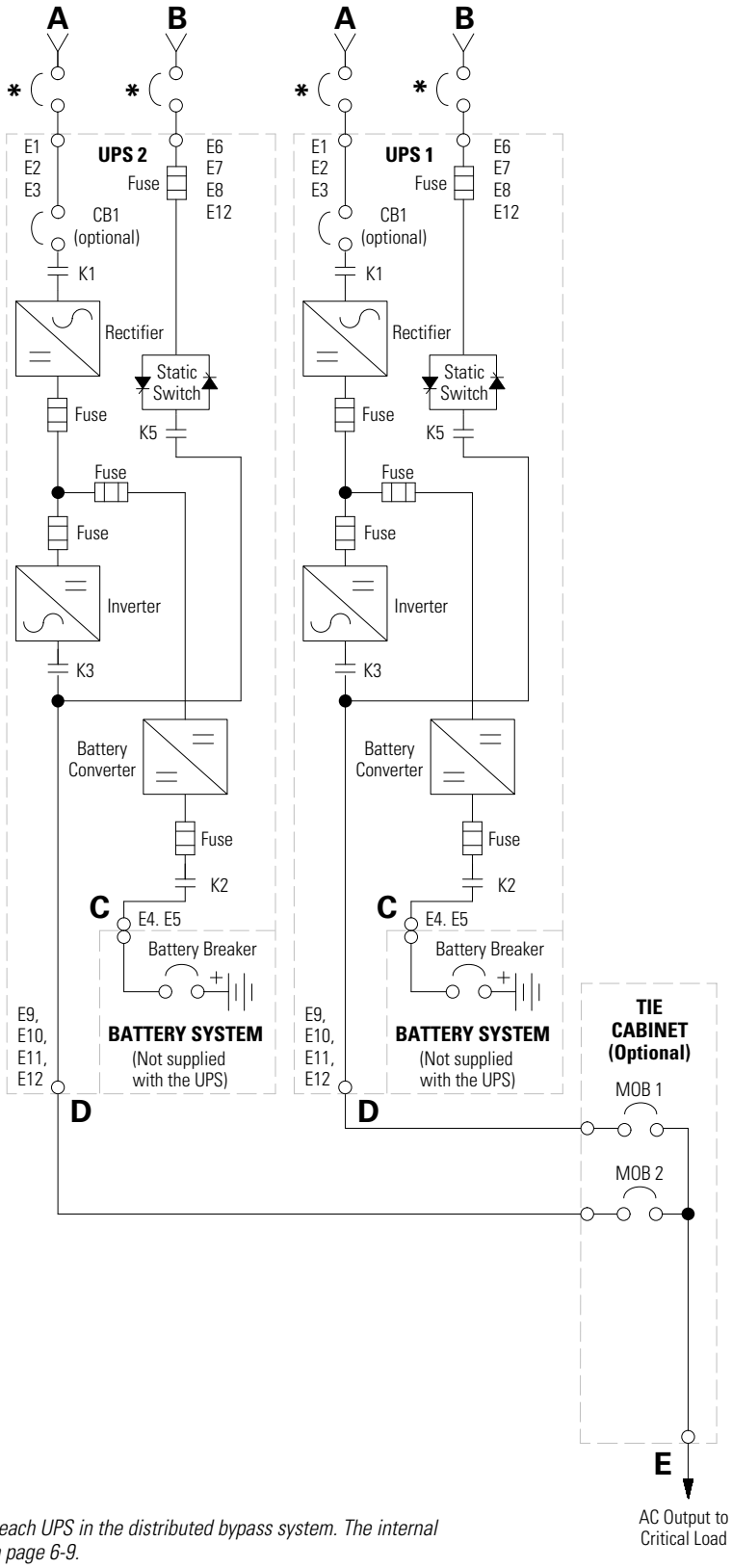


**A** – AC Input to UPS Rectifier
**B** – AC Input to Bypass
**C** – DC Input from Battery
**D** – UPS AC Output to Tie Cabinet
**E** – Output to Critical Load
* – Overcurrent Protection provided by customer

**NOTE** *This oneline does not show each UPM in the UPSs, but represents each UPS in the distributed bypass system. The internal structure of each UPS is shown in Figure 6-5 through Figure 6-8 starting on page 6-9.*

**NOTE** *If the load requires a neutral, a bypass source neutral must be provided. DO NOT install both a source neutral and a bonding jumper.*

**Figure 6-13. Typical Distributed Bypass System (1+1 and 2+0 Configurations)**

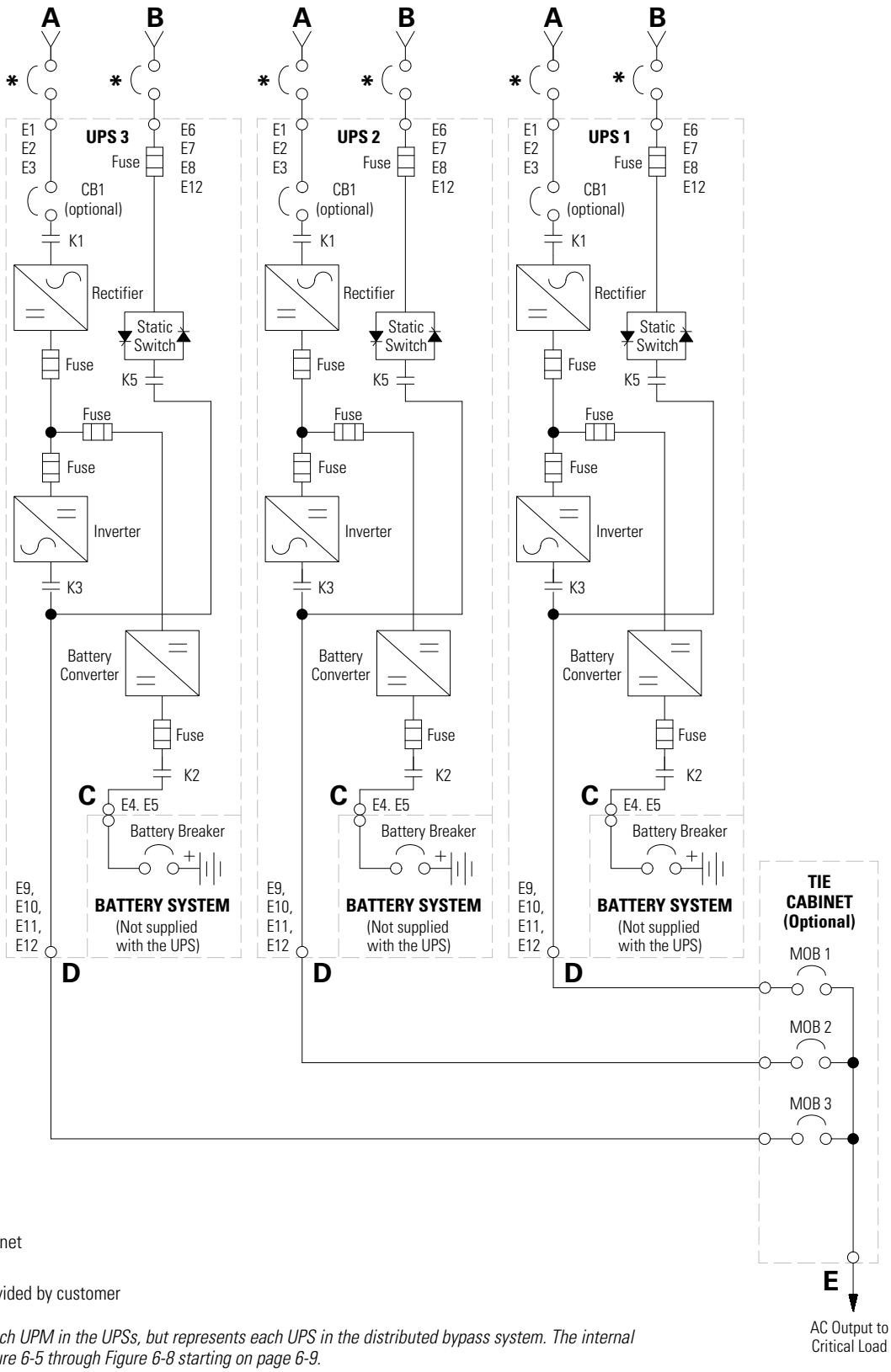


**A** – AC Input to UPS Rectifier
**B** – AC Input to Bypass
**C** – DC Input from Battery
**D** – UPS AC Output to Tie Cabinet
**E** – Output to Critical Load
***** – Overcurrent Protection provided by customer

**NOTE** *This oneline does not show each UPM in the UPSs, but represents each UPS in the distributed bypass system. The internal structure of each UPS is shown in Figure 6-5 through Figure 6-8 starting on page 6-9.*

**NOTE** *If the load requires a neutral, a bypass source neutral must be provided. DO NOT install both a source neutral and a bonding jumper.*

**Figure 6-14. Typical Distributed Bypass System (2+1 and 3+0 Configurations)**

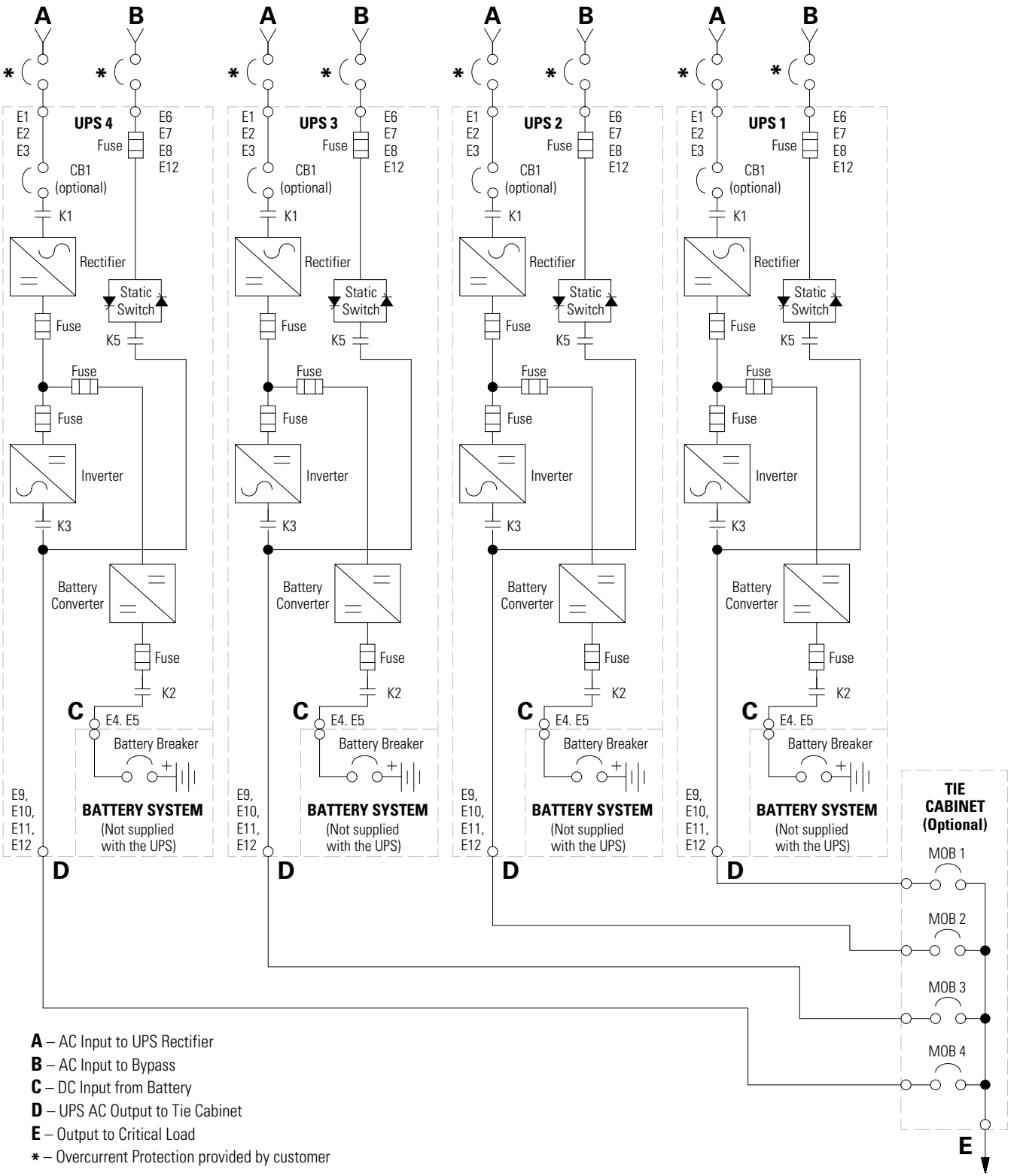


**A** – AC Input to UPS Rectifier
**B** – AC Input to Bypass
**C** – DC Input from Battery
**D** – UPS AC Output to Tie Cabinet
**E** – Output to Critical Load
***** – Overcurrent Protection provided by customer

**NOTE** *This oneline does not show each UPM in the UPSs, but represents each UPS in the distributed bypass system. The internal structure of each UPS is shown in Figure 6-5 through Figure 6-8 starting on page 6-9.*

**NOTE** *If the load requires a neutral, a bypass source neutral must be provided. DO NOT install both a source neutral and a bonding jumper.*

**Figure 6-15. Typical Distributed Bypass System (3+1 and 4+0 Configurations)**

# Chapter 7 UPS Operating Instructions

This section describes how to operate the UPS using either the older LCD non-touch panel or the newer color touchscreen control.

Refer to Section 7.2 *Using the LCD Control Panel* or Section 7.5 *Using the Color Touchscreen* for the appropriate item.

***NOTE*** *Before starting the UPS, ensure all installation tasks are complete and a preliminary startup has been performed by authorized service personnel. The preliminary startup verifies all electrical interconnections to ensure the installation was successful and the system operates properly.*

***NOTE*** *Read this section of the manual and have thorough knowledge of UPS operation before attempting to operate any of the controls.*

***NOTE*** *The UPS displays 2 minutes of battery runtime at the initial startup. After a 24-hour charging period, the UPS automatically runs a battery test and the correct battery runtime displays.*

## 7.1 UPS Controls and Indicators

The controls and indicators identified and described in this section are used to control and monitor UPS operation. Figure 7-1 shows the controls and indicators.

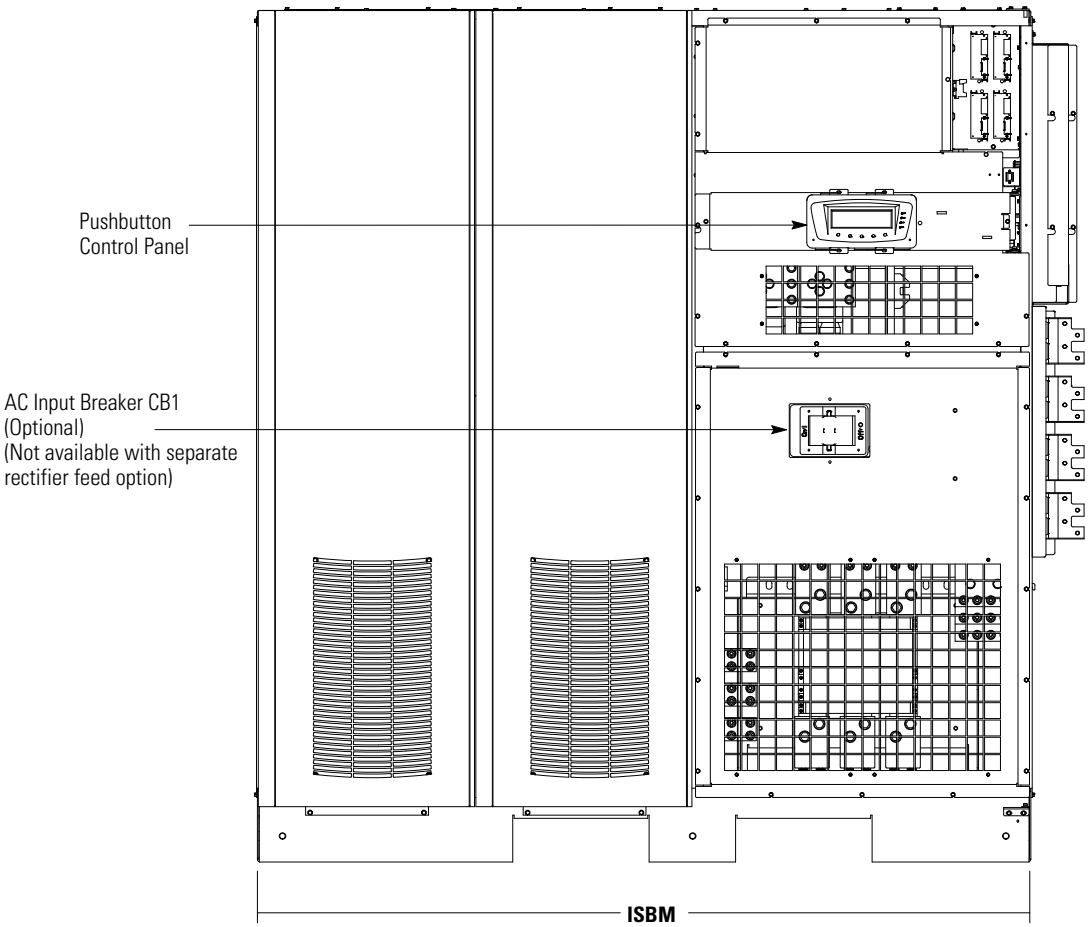


**Figure 7-1. UPS Controls and Indicators – Continuous Static Switch**

### 7.1.1 Control Panel

The control panel is used to set up and control the UPS, and to monitor UPS operation. For a description of the UPS control panel functions, see paragraph 7.2.

### 7.1.2 Circuit Breakers

Optional circuit breaker (CB1) is used to control the AC input to the UPS rectifier. CB1 is not available with the separate UPM rectifier feed configuration.

## 7.2 Using the LCD Control Panel

The following paragraphs describe the UPS control panel, including controls and indicators, and how to monitor UPS operation. The control panel (see Figure 7-2) is located on the front door of the UPS.

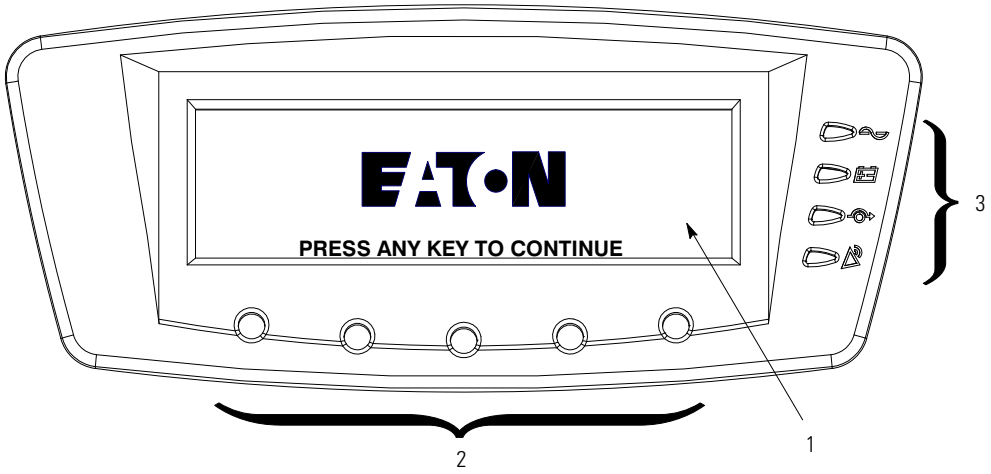


**Figure 7-2. UPS Control Panel**

The control panel consists of:

- A liquid crystal display (LCD) (**1**)
- A horizontal row of pushbutton switches (**2**)
- A vertical column of status indicators (**3**). See paragraph 7.2.1.

The following paragraphs describe using the UPS control panel to monitor the UPS. See paragraph 7.3 for use of the operational controls.

When the unit powers up, the screen displays the Eaton logo as shown in Figure 7-2. To advance to the Main Menu and Mimic screen, press any control panel pushbutton once.

### 7.2.1 Status Indicators

The four symbols on the right side of the control panel are *status indicators*. These colored light emitting diode (LED) lamps work with the alarm horn to let you know the operating status of the UPS.

Table 7-1 describes the status indicators.

**Table 7-1. Status Indicators**

| Indicator | Status | Description |
|---|---|---|
| Green | On | The UPS is in Online mode, operating normally. The power module is supplying power to the critical load. |
| | Off | The UPS is turned off. |
| Yellow | On | The UPS is in Battery mode. Because Battery mode is a normal condition of the UPS, the Online indicator also remains illuminated. |
| 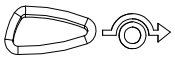 Yellow | On | The UPS is in Bypass mode. The critical load is supported by the bypass source. The Online indicator is not illuminated when the system is in Bypass mode. |
| Red | On | The UPS has an active alarm and requires immediate attention. The LCD shows the highest priority active alarms. All alarms are accompanied by an audible horn. To silence the horn, press any control panel pushbutton once. The Alarm indicator may be illuminated along with other indicators. |
| | Flashing | There is a new UPS alarm condition. The indicator flashes until acknowledged by pressing any control panel pushbutton once. |

### 7.2.2 System Events

When the UPS system is running in Online mode, it continually monitors itself and the incoming utility power. In Battery or Bypass modes, the UPS may issue alarms to let you know exactly what event caused the change from Online mode. System events on the UPS can be indicated by horns, lights, messages, or all three.

Select **EVENTS** from the menu bar on the main menu screen to look at the active events screen. This screen shows any currently active alarms, notices, or commands. For more information on using the events screen, see paragraph 7.2.6.

- **System Event Horns** – The system event horn beeps to alert an operator that an event needing attention is taking place. The horn cycles at a half-second rate.
- **System Event Indicators** – The status indicators on the UPS control panel work with the event horn to let the operator know when the UPS is operating in any mode other than Online. Only the Online indicator is visible during normal UPS system operation. The other indicators illuminate to indicate alarms or events. When an alarm occurs, first check these indicators to see what type of event has taken place. For descriptions of the status indicators, see paragraph 7.2.1.
- **System Event Messages** – When a system event occurs, a message appears on the LCD in the UPS status area. This message is also written to the Active Events Log and may be added to the History Log. The messages are divided into four categories: alarms, notices, status, and commands.

### 7.2.3 Using the LCD and Pushbuttons

The LCD on the control panel provides an operator interface with the UPS system. Figure 7-3 identifies the display areas discussed in the following sections.

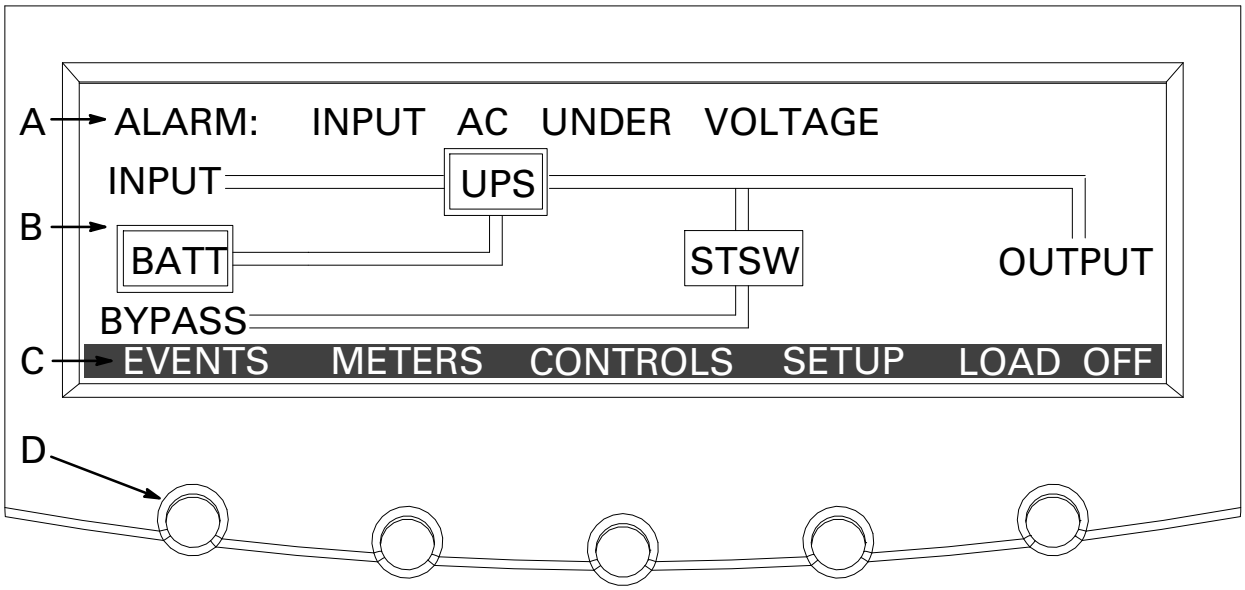


**Figure 7-3. Parts of the LCD**

**A** The *UPS status* area automatically scrolls between the Eaton model number, current date and time, active alarms, active notices, and load percent and battery runtime for the UPS. If the Environmental Monitoring Probe is installed, the temperature and humidity sensed by the probe will also be displayed. The top line of display blinks while scrolling when the system needs attention. Some notices and alarms may be accompanied by an audible horn. To silence the horn, press any control panel pushbutton once. Shown is a typical alarm message. For more information about alarms and notices, see paragraph 7.2.2.

**B** The *information area* contains data about UPS status and operations.

**C** The *menu bar* lists the titles of the available screens. To select a screen, press the pushbutton underneath the desired screen.

**D** The *navigation pushbuttons* function depending on the screen displayed. Use the pushbuttons to select menu screens or scroll through available screens. The LCD options above the pushbuttons indicate each pushbutton's function.

You can use the LCD and the pushbuttons to:

- Look at a log of UPS events (alarms, notices, and commands) (see paragraph 7.2.6)
- Monitor UPS operation (see paragraph 7.2.6)
- Set UPS parameters (see paragraph 7.2.6)
- Control UPS operation (see paragraphs 7.2.8 and 7.2.7)

After approximately 30 minutes, the display screen darkens. To restore the screen, press any pushbutton once.

### 7.2.4 Using the Menu

The UPS menu bar allows you to display data in the information area to help you monitor and control UPS operation. Table 7-2 shows the basic menu structure.

**Table 7-2. Display Function Menu Map**

| Menu Option | Description |
|---|---|
| EVENTS | Displays the list of Active System Events and a historical log of system events. |
| METERS | Displays performance meters for the system or critical load. |
| CONTROLS | Displays the System Status screen. |
| SETUP | Allows you to set the display contrast, set the date and time for the time stamp, configure the UPS serial communication ports, and view the firmware version numbers. |
| LOAD OFF | De-energizes the critical load and powers down the UPS. |
| ESC | Returns to Main Menu and Mimic screen from the Events, Meters, Controls, or Setup screens. Returns to the main System Setup Level screen from a setup submenu. |
| ↵ | Return arrow acknowledges or executes a command, or saves a setting. |
| ↑ ↓ | Up and down arrows scroll through screens and lists or highlight settings. |
| ← → | Left and right arrows select or adjust settings displayed on the screen. |

### 7.2.5 Mimic Screen

Figure 7-4 shows the Main Menu and Mimic screen. To select the Mimic screen from the Events, Meters, Controls, or Setup screens, press the ESC pushbutton on the current menu bar.

The Mimic screen shows the internal components of the UPS cabinet and a real-time graphical representation of the operating status of the system.

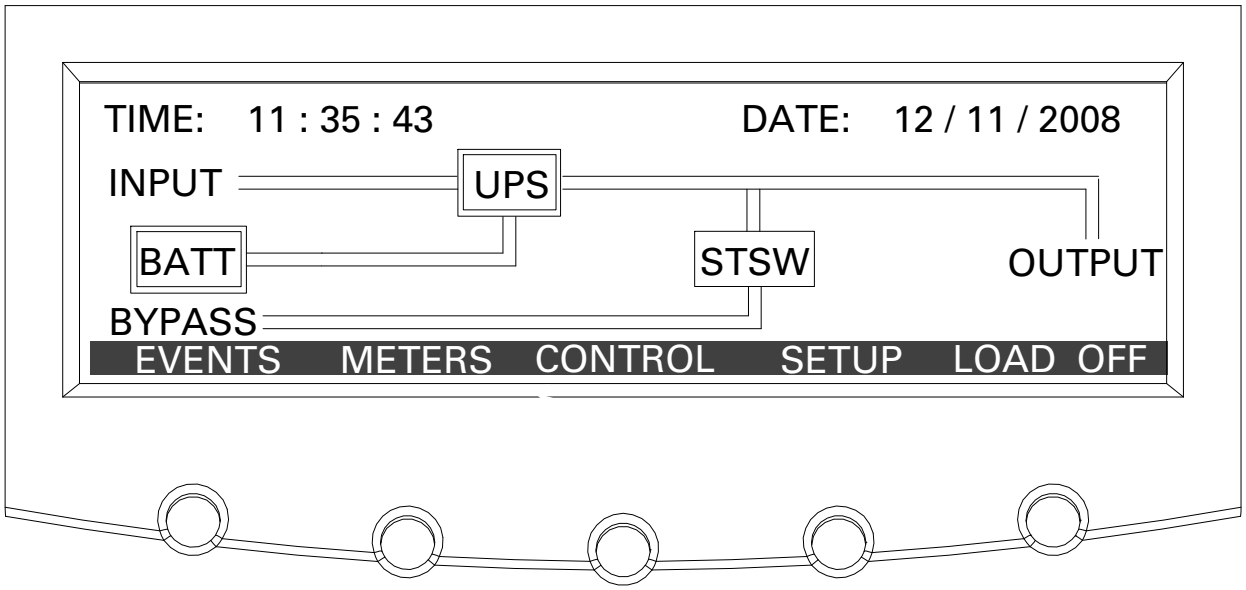


**Figure 7-4. Main Menu and Mimic Screen (Online Mode)**

### 7.2.6 Display Menu Operation

Table 7-3 describes the menu functions and and how to use them.

**Table 7-3. Display Menu Operation**

| Function | Subfunction | Operation |
|---|---|---|
| Events | | Press the EVENTS pushbutton on the main menu bar or History menu bar to display a listing of all system events that are currently active. The most recent event is listed first. As events clear, they are removed from the Active System Events listing. To scroll through the events, press the up or down arrow pushbutton on the menu bar. |
| User History | | Press the HISTORY pushbutton on the Active Events menu bar to display the User History Log. The User History Log lists up to 2048 events in chronological order, with the most recent event listed last (once 2048 is reached, the earliest event is overwritten). The end of the log (the most recent events) is displayed first; scroll upward to view older event listings. To scroll through the events, press the up or down arrow pushbutton on the menu bar. To return to the Active Events screen, press the EVENTS pushbutton on the menu bar. |
| Service History | | The Service History Log is for service personnel and is password protected. If the customer needs access to the log, contact an Eaton service representative.<br>Press the SERVICE pushbutton on the User History menu bar to display the Service History Log. The Service History Log lists up to 2048 events in chronological order, with the most recent event listed last (once 2048 is reached, the earliest event is overwritten). The end of the log (the most recent events) is displayed first; scroll upward to view older event listings. To scroll through the events, press the up or down arrow pushbutton on the menu bar. To return to the User History screen, press the USER pushbutton on the menu bar. To return to the Active Events screen, press the EVENTS pushbutton on the menu bar. |
| Meters – UPS<br>Meters – UPM | | The Meter screens show the UPS meter readings for the unit. The default voltage displayed on these screens is phase-to-neutral. However, an authorized Eaton Customer Service Engineer can change the screens to display the voltage phase-to-phase (A-B, B-C, C-A). Press the METERS pushbutton on the main menu bar to display the Meter screens. To scroll through the meter screens, press the up or down arrow pushbutton on the menu bar. The current UPS readings are displayed in the information area of the screen. |
| | Output – UPS<br>Output – UPM | The Output screen shows output voltage (phase-to-neutral), output current (each phase), and frequency being supplied by the UPS, as well as the kVA, kW, and power factor measurements. |
| | Input – UPS<br>Input – UPM | The Input screen shows input voltage (phase-to-neutral), input current (each phase), and frequency of the incoming utility source, as well as the kVA, kW, and power factor measurements. |
| | Bypass | The Bypass screen shows the bypass input voltage (phase-to-neutral), input current (each phase), and frequency of the incoming utility source, as well as the kVA, kW, and power factor measurements. |
| | Battery – UPS<br>Battery – UPM | The Battery screen displays the battery voltage (Vdc), the battery current (Idc), the minutes of battery time remaining, and battery temperature. Battery temperature must be set up by an authorized Eaton Customer Service Engineer. When battery life decreases to less than 20%, Check Battery is displayed. |
| | Statistics | The Statistics screen displays the hours on line and the total kW hours used. |
| | Output Current – UPS<br>Output Current – UPM | The Output Current screen displays a real-time bar graph of the output current of the UPS. The graph shows the current for each phase. |
| | Output Power – UPM | The Output Power screen displays the power in kW and kVA for each UPM. |
| System Level 0 Setup | Function Selection | This screen can be used to set the screen contrast, show the firmware versions installed, identify the unit type, change the display language, set up Energy Saver functions, set up Advanced Power Management functions, and enter a password to access Level 1 functions. Press the SETUP pushbutton on the main menu bar to display the System Setup Level 0 Screen. No password is necessary to access Level 0 functions. Use the up or down arrow pushbutton to highlight the setup function screen desired, then press the SELECT pushbutton to display the function screen. |

**Table 7-3. Display Menu Operation (continued)**

| Function | Subfunction | Operation |
|---|---|---|
| | Contrast Adjust | Select CONTRAST from the System Setup Level 0 menu to display the Contrast Adjust screen. Use the left or right arrow pushbutton to adjust the contrast for the LCD. When the contrast adjustment is complete, press the SAVE pushbutton. Once the setting is saved, the System Setup screen displays. To return to the System Setup screen without saving the setting, press the ESC pushbutton. |
| | Firmware Versions | The Versions screen provides the firmware version numbers installed on the UPS. Select VERSIONS from the System Setup Level 0 menu to display the Versions screen. To scroll through the firmware types, press the up or down arrow pushbutton on the menu bar. To return to the System Setup screen, press the ESC pushbutton. |
| | Identification | The Unit Type screen provides the model, CTO, and serial numbers of the UPS unit. Select UNIT TYPE from the System Setup Level 0 menu to display the Unit Type screen. To return to the System Setup screen, press the ESC pushbutton. |
| | Language | The Language Setup screen allows the display menu language to be set. Select LANGUAGE SETUP from the System Setup Level 0 menu to display the Language Setup screen. Use the up or down arrow pushbutton to highlight the desired language, then press the SELECT pushbutton. To return to the System Setup screen, press the ESC pushbutton. |
| | Energy Saver System | The Energy Saver System Setup screen allows the Energy Saver function to be configured. Select ENERGY SAVER SYSTEM SETUP from the System Setup Level 0 menu to display the Energy Saver System Setup screen. Use the up or down arrow pushbutton to highlight the desired function, then press the SELECT pushbutton. To return to the System Setup screen, press the ESC pushbutton. |
| | Storm Detection Counter | The Storm Detection Counter screen sets the number of power line disturbances that can occur before the UPS locks into Online mode. Select STORM DETECTION COUNTER from the Energy Saver System Setup screen to display the Storm Detection Counter screen. Use the up or down arrow pushbutton to set the counter. Press SAVE or ABORT. Once the action is completed, the Energy Saver System Setup screen is displayed. |
| | Storm Detection Timer | The Storm Detection Timer screen sets the length of time that power line disturbances are monitored. The time can be set in 10 minute increments from 0 to 990 minutes. Select STORM DETECTION TIMER from the Energy Saver System Setup screen to display the Storm Detection Timer screen. Use the up or down arrow pushbutton to set the time. Press SAVE or ABORT. Once the action is completed, the Energy Saver System Setup screen is displayed. |
| | High Alert Timer | The High Alert Timer screen sets the length of time the UPS remains in Online mode before transferring back to Energy Saver System mode. The time can be set in 10 minute increments from 0 to 990 minutes. Select HIGH ALERT TIMER from the Energy Saver System Setup screen to display the High Alert Timer screen. Use the up or down arrow pushbutton to set the time. Press SAVE or ABORT. Once the action is completed, the Energy Saver System Setup screen is displayed. |
| | Variable Module Management System | The Module Management System Setup screen allows the Variable Module Management System function to be configured. Select MODULE MANAGEMENT SYSTEM SETUP from the System Setup Level 0 menu to display the Module Management System Setup screen. Use the up or down arrow pushbutton to highlight the desired function, then press the SELECT pushbutton. To return to the System Setup screen, press the ESC pushbutton. |
| | VMMS Load Limit | The VMMS Load Limit screen sets the maximum load that can be drawn from a UPM before additional UPMs are activated. Select APM LOAD LIMIT from the Module Management System Setup screen to display the VMMS Load Limit screen. Use the up or down arrow pushbutton to set the load limit. Press SAVE or ABORT. Once the action is completed, the Module Management System screen is displayed. |
| | VMMS UPM Redundancy | The VMMS UPM Redundancy screen sets the number of UPMs to remain active to maintain redundancy. Select VMMS UPM REDUNDANCY from the Module Management System Setup screen to display the VMMS UPM Redundancy screen. Use the up or down arrow pushbutton to set the number of UPMs. Press SAVE or ABORT. Once the action is completed, the Module Management System Setup screen is displayed. |

**Table 7-3. Display Menu Operation (continued)**

| Function | Subfunction | Operation |
|---|---|---|
| System Level 1 Setup | Password | The System Setup Level 1 screen can be used to set the UPS date and time, set the serial ports, change the Level 1 password, and log out of Level 1. In addition, the Level 0 functions are available. A password is required to access the Level 1 functions. To enter the password, select ENTER PASSWORD from the System Setup Level 0 menu to display the Enter Password screen. Use the left or right arrow pushbutton to select the password character position. Use the up or down arrow pushbutton to change the password character. Once the password is entered, press the DONE pushbutton. The System Setup Level 1 menu screen is displayed. The default password is L1. |
| | Function Selection | Use the up or down arrow pushbutton to highlight the setup function screen desired, then press the SELECT pushbutton to display the function screen. The Level 1 screen times out after 60 minutes or can be logged out at any time by selecting the LOG OUT function from the menu screen. |
| | Change Password | The Change Password screen allows the System Setup Level 1 password to be changed. Select CHANGE PASSWORD from the System Setup Level 1 menu to display the Change Password screen. Use the left or right arrow pushbutton to select the password character position. Use the up or down arrow pushbutton to change the password character. Once the new password is entered, press the DONE pushbutton. The Change Password Save screen is displayed. |
| | Change Password Save | The Change Password Save screen lets you save the new password, retry another password, or abort the password change. Press SAVE, RETRY, or ABORT. If SAVE or ABORT is pressed, the action is completed, and the System Setup screen displays. If RETRY is pressed, the Change Password screen is redisplayed. |
| | Time Format | The Time Format Setup screen allows the selection of either month/day/year or day/month/year formats for display on the screen and for logging events in the Event and History Logs. Select SET DATE AND TIME from the System Setup Level 1 menu to display the Time Format Setup screen. Use the up or down arrow pushbutton to highlight the desired format, then press the SELECT pushbutton to display the Set Date and Time screen. To return to the System Setup screen, press the ESC pushbutton. |
| | Set Date and Time MM/DD/YYYY | The Set Date and Time MM/DD/YYYY screen allows the internal date and time of the UPS to be set in the month/day/year format. The date and time information is used for display on the screen and for logging events in the Event and History Logs. Use the left or right arrow pushbutton to highlight the setting to be changed. Use the up or down arrow pushbutton to make the change. When finished making changes, use the left or right arrow pushbutton to highlight SAVE and the up or down arrow pushbutton to select YES. To complete the save function and return to the System Setup screen, select the return arrow pushbutton. |
| | Set Date and Time DD/MM/YYYY | The Set Date and Time DD/MM/YYYY screen allows the internal date and time of the UPS to be set in the day/month/year format. The date and time information is used for display on the screen and for logging events in the Event and History Logs. Use the left or right arrow pushbutton to highlight the setting to be changed. Use the up or down arrow pushbutton to make the change. When finished making changes, use the left or right arrow pushbutton to highlight SAVE and the up or down arrow pushbutton to select YES. To complete the save function and return to the System Setup screen, select the return arrow pushbutton. |
| | Com Port Selection | The Com Port Setup screen allows selection of the serial COM port to set up. Select COM PORT SETUP from the System Setup Level 1 menu to display the COM Port Setup screen. Use the up or down arrow pushbutton to highlight the COM port to be set up, then press the SELECT pushbutton. To return to the System Setup screen, press the ESC pushbutton. |
| | Com Port Setup | The COM Setup screen is used to change and save the settings for the selected serial communication port. The COM port number selected from the COM Port Setup screen displays. If the changes are not wanted, use the ABORT pushbutton to return to the COM Port Setup screen. Use the up or down arrow pushbutton to highlight the setting to be changed. Use the return arrow pushbutton to toggle through the values for the setting to make the change. Press SAVE or ABORT. Once the action is completed, the COM Port Setup screen is displayed. |
| Controls | | See paragraph 7.2.8 for details. |

### 7.2.7 Load Off Screen

The Load Off screen (Figure 7-5) is displayed when the LOAD OFF pushbutton is selected from the main menu bar, the UPS Control Command screen, or the Bypass Control Command screen. This screen allows the LOAD OFF process to be aborted if the LOAD OFF pushbutton was pressed accidentally. For Load Off procedures, see paragraph 7.3.24 or paragraph 7.4.27.

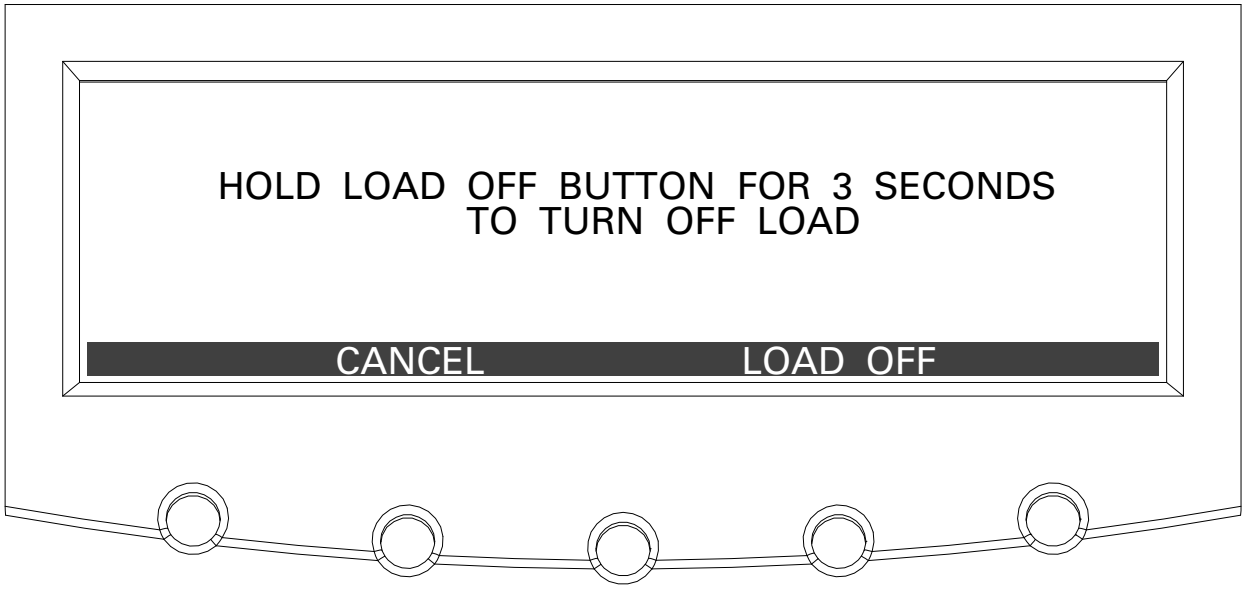


**Figure 7-5. Load Off Screen**

### 7.2.8 System Status Screen and Controls

Press the CONTROLS pushbutton on the main menu bar to display the System Status screen. Online operation, transfer to bypass, charger control, UPM startup and shutdown, and LOAD OFF commands are controlled through this screen. In addition, the screen displays the current status of the UPS, indicates whether the UPS is in Maintenance Bypass or Bypass, and displays the state of the UPM and battery charger. Figure 7-6 shows the System Status screen.

Use the ↑ or ↓ pushbutton on the System Status menu bar to highlight the command screen desired, then press the CONTROLS pushbutton to display the command menu screen.

Table 7-4 lists the typical System Status Screen Messages that are displayed during UPS operation.

Table 7-5 describes the control functions and provides instructions to access and use the command menu screens.

For detailed information about using the System Controls, see paragraph 7.3.

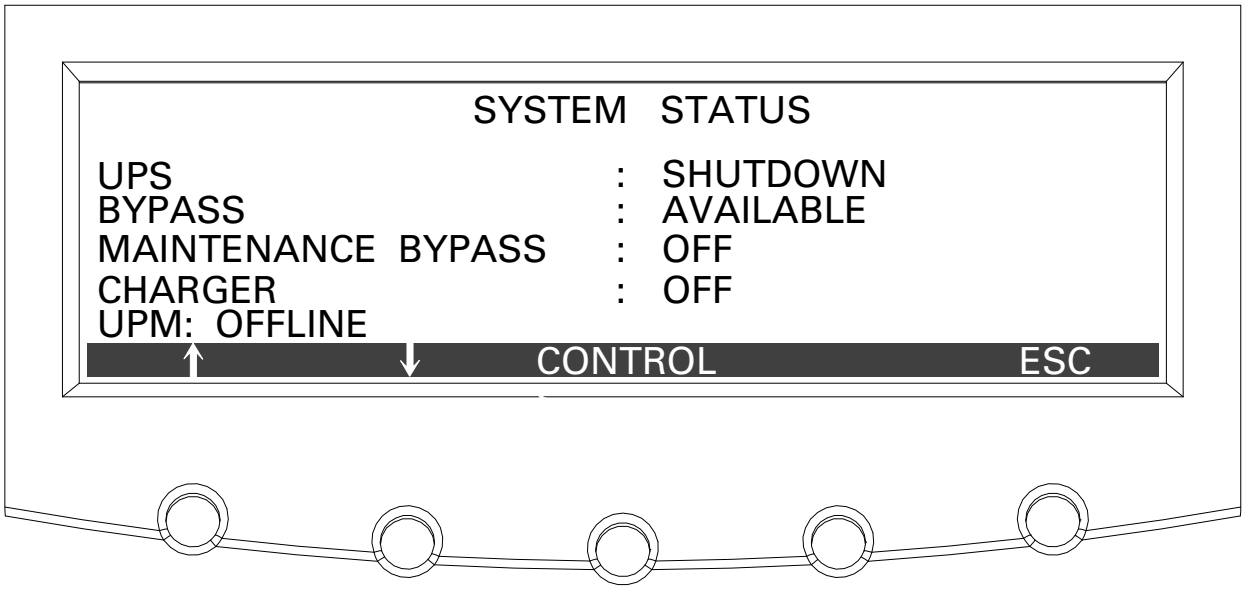


**Figure 7-6. Typical System Status Screen**

**Table 7-4. Typical System Status Messages**

| Function | Message |
|---|---|
| UPS | Shutdown; Bypass; Online; Online with ESS; Online +VMMS; High Alert |
| Bypass | Off; On; Available |
| Maintenance Bypass | Off; On |
| Charger | Charger Off; Charging |
| UPM (during startup) | DC Starting, Charger Off; DC Starting, Close Battery Breaker; Inverter Starting; Inverter Syncing; Ready; Online |
| UPM 1<br>UPM 4 (if FI-UPM is installed) | Offline; Shutdown, Charger Off; Ready; Ready, Charging; Online, Charger Off; Online, Charging |

**Table 7-5. Command Menu Operation**

| Function | Subfunction | Operation |
|---|---|---|
| UPS Control Commands | | Use the up or down arrow pushbutton to highlight the command function desired, then press the SELECT pushbutton to execute the command or proceed to further command screens. |
| | Go to Online | Starts the UPS in Online mode or transfers the UPS to Online mode from Bypass mode. |
| | Enable (Disable) Energy Saver | Enables or disables Energy Saver System mode. Enable changes to Disable when the Energy Saver System mode is enabled. |
| | Enable (Disable) Var Module Management | Enables or disables the Variable Module Management System mode. Enable changes to Disable when the Variable Module Management System mode is enabled. |
| | Start High Alert | Starts High Alert mode. |
| | Go to Bypass | Starts the UPS in Bypass mode or transfers the UPS to Bypass mode from Online mode. |
| | Load Off | Displays the Load Off screen (see paragraph 7.2.7). |

| Function | Subfunction | Operation |
|---|---|---|
| Bypass Commands | | Use the up or down arrow pushbutton to highlight the command function desired, then press the SELECT pushbutton to execute the command or proceed to further command screens. |
| | Go to Bypass | Starts the UPS in Bypass mode or transfers the UPS to Bypass mode from Online mode. |
| | Go to Online | Starts the UPS in Online mode or transfers the UPS to Online mode from Bypass mode. |
| | Enable (Disable) Energy Saver | Enables or disables Energy Saver System mode. Enable changes to Disable when the Energy Saver System mode is enabled. |
| | Enable (Disable) Var Module Management | Enables or disables the Variable Module Management System mode. Enable changes to Disable when the Variable Module Management System mode is enabled. |
| | Start Harmonic Reduction | Starts Harmonic Reduction mode. |
| | Start High Alert | Starts High Alert mode. |
| | Load Off | Displays the Load Off screen (see paragraph 7.2.7). |
| Charger Control Commands | | Use the up or down arrow pushbutton to highlight the command function desired, then press the SELECT pushbutton to execute the command. |
| | Charger On | Turns the battery charger on. |
| | Charger Off | Turns the battery charger off. |
| UPM Control Commands | | Use the up or down arrow pushbutton to highlight the command function desired, then press the SELECT pushbutton to execute the command. |
| | UPM On | Turns the UPM on without transferring the load to Online mode. The Load is on bypass. |
| | UPM Off | Transfers the load to bypass and turns the UPM off. |
| | UPM Go to Online | Turns the UPM on and transfers the load to Online mode. |
| | Charger On | Turns the battery charger on. |
| | Charger Off | Turns the battery charger off. |

NOTE The Energy Saver System and Variable Module Management System mode commands are displayed only if enabled at the factory or by an Eaton Customer Service Engineer.

NOTE Variable Module Management System and Energy Saver System modes are mutually exclusive.

### 7.2.9 Load Off Screen

The Load Off screen (Figure 7-5) is displayed when the LOAD OFF pushbutton is selected from the main menu bar, the UPS Control Command screen, or the Bypass Control Command screen. This screen allows the LOAD OFF process to be aborted if the LOAD OFF pushbutton was pressed accidentally. For Load Off procedures, see paragraph 7.3.24 or paragraph 7.4.27.

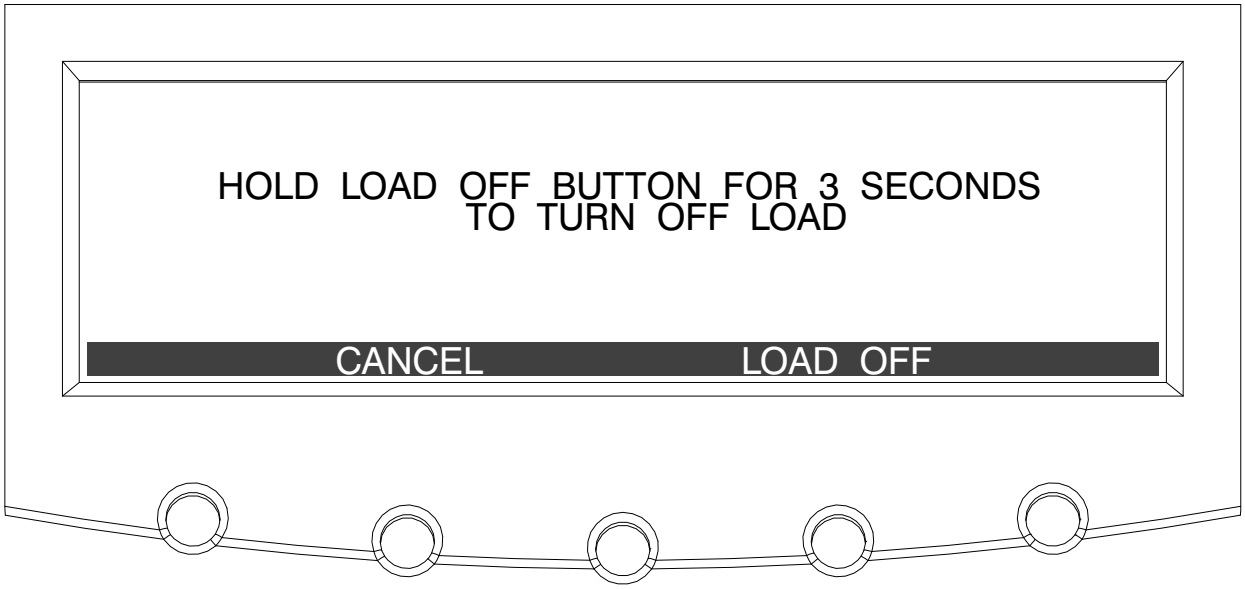


**Figure 7-7. Load Off Screen**

## 7.3 Single UPS Operation

The paragraphs in this section provide operating instructions for a UPS system containing only one UPS.

***NOTE*** *A Field Installed UPM (FI-UPM) is always designated as UPM 4.*

### 7.3.1 Starting the UPS in Online Mode

To start the UPS system:

1. Unfasten the front door latch and swing the door open.
2. If the UPS contains input breaker CB1, verify that input breaker CB1 is open.
3. Close the UPS input feeder circuit breaker.
4. Close the UPS Bypass input feeder circuit breaker.
5. If the UPS contains input breaker CB1, close input breaker CB1.
6. Close the door and secure the latch.
7. Observe the UPS control panel display becoming active, indicating logic power.
8. Press the `CONTROLS` pushbutton on the main menu bar. The System Status screen is displayed.
9. On the System Status screen, verify the UPS status is `SHUTDOWN` and the UPM status is `OFFLINE`.
10. Close the battery breaker.
11. Verify no alarms are active.
12. On the System Status screen, select the `UPS` command.
13. Press the `CONTROLS` pushbutton on the System Status menu bar. The UPS Control Command screen is displayed.
14. On the UPS Control Command screen, select `GO TO ONLINE`.
15. Press the `SELECT` pushbutton on the UPS Command menu bar.

    If Auto Bypass is enabled (factory default), the critical load is immediately supplied by the bypass source, in Bypass mode, until the inverter turns on and the UPS transfers to Online mode. The status indicator on the UPS control panel indicates the UPS is in Bypass mode. If Auto Bypass is not enabled, the UPS output remains off until the UPS transfers to Online mode.

**16.** Verify the following messages display sequentially on the UPM status line:

```
DC STARTING, CHARGER OFF
INVERTER STARTING
INVERTER SYNCING
ONLINE, CHARGING
```

The rectifier and inverter turn on. The inverter continues to ramp up to full voltage.

Once the inverter reaches full voltage, the UPS output contactor K3 closes and the static switch turns off. Power is now supplied to the critical load in Online mode. It takes approximately one minute for the UPS to achieve Online mode.

The Online status indicator is illuminated. The UPS status indicates `ONLINE`. The UPM status indicates `ONLINE, CHARGING`.

### 7.3.2 Enable Energy Saver System Mode from the UPS Command Menu

To enable Energy Saver System mode:

***NOTE*** *The Energy Saver System mode commands are displayed only if enabled at the factory or by an Eaton Customer Service Engineer.*

***NOTE*** *The Variable Module Management System and Energy Saver System modes are mutually exclusive. If the Variable Module Management System mode is enabled, the Energy Saver System mode commands will not be displayed.*

**1.** Press the `CONTROLS` pushbutton on the main menu bar. The System Status screen is displayed.

**2.** On the System Status screen, select the `UPS` command.

**3.** Press the `CONTROLS` pushbutton on the System Status menu bar. The UPS Control Command screen is displayed.

**4.** On the UPS Control Command screen, select `ENABLE ENERGY SAVER`.

**5.** Press the `SELECT` pushbutton on the UPS Command menu bar.

The UPS transfers to Energy Saver System mode.

The Online status indicator is illuminated. The UPS status indicates `ONLINE WITH ESS`. The UPM status indicates `ONLINE`. If the battery is not charging, the power module is off.

### 7.3.3 Disable Energy Saver System Mode from the UPS Command Menu

To disable Energy Saver System mode:

***NOTE*** *The Energy Saver System mode commands are displayed only if enabled at the factory or by an Eaton Customer Service Engineer.*

***NOTE*** *The Variable Module Management System and Energy Saver System modes are mutually exclusive. If the Variable Module Management System mode is enabled, the Energy Saver System mode commands will not be displayed.*

1. Press the `CONTROLS` pushbutton on the main menu bar. The System Status screen is displayed.
2. On the System Status screen, select the `UPS` command.
3. Press the `CONTROLS` pushbutton on the System Status menu bar. The UPS Control Command screen is displayed.
4. On the UPS Control Command screen, select `DISABLE ENERGY SAVER`.
5. Press the `SELECT` pushbutton on the UPS Command menu bar.

   The UPS transfers to Battery mode and then to Online mode.

   The Online status indicator is illuminated. The UPS status indicates `ONLINE`. The UPM status indicates `ONLINE`.

### 7.3.4 Start Energy Saver System High Alert Mode from the UPS Command Menu

To start High Alert mode:

***NOTE*** *The High Alert mode commands are displayed only if enabled at the factory or by an Eaton Customer Service Engineer.*

***NOTE*** *The Variable Module Management System and Energy Saver System modes are mutually exclusive. If the Variable Module Management System mode is enabled, the Energy Saver System mode commands will not be displayed.*

1. Press the `CONTROLS` pushbutton on the main menu bar. The System Status screen is displayed.
2. On the System Status screen, select the `UPS` command.
3. Press the `CONTROLS` pushbutton on the System Status menu bar. The UPS Control Command screen is displayed.
4. On the UPS Control Command screen, select `START HIGH ALERT`.
5. Press the `SELECT` pushbutton on the UPS Command menu bar.

   The UPS starts High Alert mode with the UPMs online supplying the critical load. After one hour the UPS transfers to Energy Saver System mode.

   The Online status indicator is illuminated. The UPS status indicates `HIGH ALERT`. The UPM status indicates `ONLINE`. The power module is on.

### 7.3.5 Enable Variable Module Management System Mode from the UPS Command Menu

To enable Variable Module Management System mode:

***NOTE*** *The Variable Module Management System mode commands are displayed only if enabled at the factory or by an Eaton Customer Service Engineer.*

***NOTE*** *The Variable Module Management System and Energy Saver System modes are mutually exclusive. If the Energy Saver System mode is enabled, the Variable Module Management System mode commands will not be displayed.*

1. Press the `CONTROLS` pushbutton on the main menu bar. The System Status screen is displayed.
2. On the System Status screen, select the `UPS` command.
3. Press the `CONTROLS` pushbutton on the System Status menu bar. The UPS Control Command screen is displayed.
4. On the UPS Control Command screen, select `ENABLE VAR MODULE MANAGEMENT`.
5. Press the `SELECT` pushbutton on the UPS Command menu bar.

   The UPS transfers to Variable Module Management System mode. In approximately twenty seconds the UPS calculates the required number of UPMs needed to support the load.

   The Online status indicator is illuminated. The UPS status indicates `ONLINE + VMMS`. The UPM status indicates `ONLINE`.

### 7.3.6 Disable Variable Module Management System Mode from the UPS Command Menu

To disable Variable Module Management System mode:

***NOTE*** *The Variable Module Management System mode commands are displayed only if enabled at the factory or by an Eaton Customer Service Engineer.*

***NOTE*** *The Variable Module Management System and Energy Saver System modes are mutually exclusive. If the Energy Saver System mode is enabled, the Variable Module Management System mode commands will not be displayed.*

1. Press the `CONTROLS` pushbutton on the main menu bar. The System Status screen is displayed.
2. On the System Status screen, select the `UPS` command.
3. Press the `CONTROLS` pushbutton on the System Status menu bar. The UPS Control Command screen is displayed.
4. On the UPS Control Command screen, select `DISABLE VAR MODULE MANAGEMENT`.
5. Press the `SELECT` pushbutton on the UPS Command menu bar.

   The UPS transfers to Battery mode and then to Online mode in approximately ten seconds.

   The Online status indicator is illuminated. The UPS status indicates `ONLINE`. The UPM status indicates `ONLINE`.

### 7.3.7 Start Variable Module Management System High Alert Mode from the UPS Command Menu

To start High Alert mode:

***NOTE*** *The High Alert mode commands are displayed only if enabled at the factory or by an Eaton Customer Service Engineer.*

***NOTE*** *The Variable Module Management System and Energy Saver System modes are mutually exclusive. If the Energy Saver System mode is enabled, the Variable Module Management System mode commands will not be displayed.*

1. Press the `CONTROLS` pushbutton on the main menu bar. The System Status screen is displayed.
2. On the System Status screen, select the `UPS` command.
3. Press the `CONTROLS` pushbutton on the System Status menu bar. The UPS Control Command screen is displayed.
4. On the UPS Control Command screen, select `START HIGH ALERT`.
5. Press the `SELECT` pushbutton on the UPS Command menu bar.

   The UPS starts High Alert mode with the UPMs online supplying the critical load. After one hour the UPS transfers to Variable Module Management System mode.

   The Online status indicator is illuminated. The UPS status indicates `HIGH ALERT`. The UPM status indicates `ONLINE`. The power module is on.

### 7.3.8 Starting the UPS in Bypass Mode

If the inverter output of the UPS is not available and the critical load needs to be energized:

**CAUTION**

In Bypass mode, the critical load is not protected from commercial power interruptions and abnormalities.

1. Unfasten the front door latch and swing the door open.
2. If the UPS contains input breaker CB1, verify that input breaker CB1 is open.
3. Close the UPS input feeder circuit breaker.
4. Close the UPS Bypass input feeder circuit breaker.
5. If the UPS contains input breaker CB1, close input breaker CB1.
6. Close the door and secure the latch.
7. Observe the UPS control panel becoming active, indicating logic power.
8. Press the `CONTROLS` pushbutton on the main menu bar. The System Status screen is displayed.
9. On the System Status screen, verify the UPS status is `SHUTDOWN` and the UPM status is `OFFLINE`.
10. On the System Status screen, select the `BYPASS` command.

11. Press the CONTROLS pushbutton on the System Status menu bar. The Bypass Control Command screen is displayed.
12. On the Bypass Control Command screen, select GO TO BYPASS.
13. Press the SELECT pushbutton on the Bypass Command menu bar.

    The critical load is immediately supplied by the bypass source, in Bypass mode.

    The BYPASS status indicator is illuminated. The Bypass status indicates ON. The UPM status indicates SHUTDOWN, CLOSE BATTERY.

### 7.3.9 Enable Energy Saver System Mode from the Bypass Command Menu

To enable Energy Saver System mode:

***NOTE*** *The Energy Saver System mode commands are displayed only if enabled at the factory or by an Eaton Customer Service Engineer.*

***NOTE*** *The Variable Module Management System and Energy Saver System modes are mutually exclusive. If the Variable Module Management System mode is enabled, the Energy Saver System mode commands will not be displayed.*

1. Press the CONTROLS pushbutton on the main menu bar. The System Status screen is displayed.
2. On the System Status screen, select the BYPASS command.
3. Press the CONTROLS pushbutton on the System Status menu bar. The Bypass Control Command screen is displayed.
4. On the Bypass Control Command screen, select ENABLE ENERGY SAVER.
5. Press the SELECT pushbutton on the Bypass Command menu bar.

   If the UPS is online, the UPS transfers to Energy Saver System mode.

   The Online status indicator is illuminated. The UPS status indicates ONLINE WITH ESS. The UPM status indicates ONLINE. If the battery is not charging, the power module is off.

### 7.3.10 Disable Energy Saver System Mode from the Bypass Command Menu

To disable Energy Saver System mode:

***NOTE*** *The Energy Saver System mode commands are displayed only if enabled at the factory or by an Eaton Customer Service Engineer.*

***NOTE*** *The Variable Module Management System and Energy Saver System modes are mutually exclusive. If the Variable Module Management System mode is enabled, the Energy Saver System mode commands will not be displayed.*

1. Press the CONTROLS pushbutton on the main menu bar. The System Status screen is displayed.
2. On the System Status screen, select the BYPASS command.
3. Press the CONTROLS pushbutton on the System Status menu bar. The Bypass Control Command screen is displayed.

4. On the Bypass Control Command screen, select DISABLE ENERGY SAVER.
5. Press the SELECT pushbutton on the Bypass Command menu bar.

   If the UPS is online, the UPS transfers to Battery mode and then to Online mode.

   The Online status indicator is illuminated. The UPS status indicates ONLINE. The UPM status indicates ONLINE.

### 7.3.11 Start Energy Saver System High Alert Mode from the Bypass Command Menu

To start High Alert mode:

***NOTE*** *The High Alert mode commands are displayed only if enabled at the factory or by an Eaton Customer Service Engineer.*

***NOTE*** *The Variable Module Management System and Energy Saver System modes are mutually exclusive. If the Variable Module Management System mode is enabled, the Energy Saver System mode commands will not be displayed.*

1. Press the CONTROLS pushbutton on the main menu bar. The System Status screen is displayed.
2. On the System Status screen, select the BYPASS command.
3. Press the CONTROLS pushbutton on the System Status menu bar. The Bypass Control Command screen is displayed.
4. On the Bypass Control Command screen, select START HIGH ALERT.
5. Press the SELECT pushbutton on the Bypass Command menu bar.

   If the UPS is online, the UPS starts High Alert mode with the UPMs online supplying the critical load. After one hour the UPS transfers to Energy Saver System mode.

   The Online status indicator is illuminated. The UPS status indicates HIGH ALERT. The UPM status indicates ONLINE. The power module is on.

### 7.3.12 Enable Variable Module Management System Mode from the Bypass Command Menu

To enable Variable Module Management System mode:

***NOTE*** *The Variable Module Management System mode commands are displayed only if enabled at the factory or by an Eaton Customer Service Engineer.*

***NOTE*** *The Variable Module Management System and Energy Saver System modes are mutually exclusive. If the Energy Saver System mode is enabled, the Variable Module Management System mode commands will not be displayed.*

1. Press the CONTROLS pushbutton on the main menu bar. The System Status screen is displayed.
2. On the System Status screen, select the BYPASS command.
3. Press the CONTROLS pushbutton on the System Status menu bar. The Bypass Control Command screen is displayed.

4. On the Bypass Control Command screen, select ENABLE VAR MODULE MANAGEMENT.

5. Press the SELECT pushbutton on the Bypass Command menu bar.

   If the UPS is online, the UPS transfers to Variable Module Management System mode. In approximately twenty seconds the UPS calculates the required number of UPMs needed to support the load.

   The Online status indicator is illuminated. The UPS status indicates ONLINE + VMMS. The UPM status indicates ONLINE.

### 7.3.13 Disable Variable Module Management System Mode from the Bypass Command Menu

To disable Variable Module Management System mode:

***NOTE*** *The Variable Module Management System mode commands are displayed only if enabled at the factory or by an Eaton Customer Service Engineer.*

***NOTE*** *The Variable Module Management System and Energy Saver System modes are mutually exclusive. If the Energy Saver System mode is enabled, the Variable Module Management System mode commands will not be displayed.*

1. Press the CONTROLS pushbutton on the main menu bar. The System Status screen is displayed.

2. On the System Status screen, select the BYPASS command.

3. Press the CONTROLS pushbutton on the System Status menu bar. The Bypass Control Command screen is displayed.

4. On the Bypass Control Command screen, select DISABLE VAR MODULE MANAGEMENT.

5. Press the SELECT pushbutton on the Bypass Command menu bar.

   If the UPS is online, the UPS transfers to Battery mode and then to Online mode in approximately ten seconds.

   The Online status indicator is illuminated. The UPS status indicates ONLINE. The UPM status indicates ONLINE.

### 7.3.14 Start Variable Module Management System High Alert Mode from the Bypass Command Menu

To start High Alert mode:

***NOTE*** *The High Alert mode commands are displayed only if enabled at the factory or by an Eaton Customer Service Engineer.*

***NOTE*** *The Variable Module Management System and Energy Saver System modes are mutually exclusive. If the Energy Saver System mode is enabled, the Variable Module Management System mode commands will not be displayed.*

1. Press the CONTROLS pushbutton on the main menu bar. The System Status screen is displayed.

2. On the System Status screen, select the BYPASS command.

3. Press the CONTROLS pushbutton on the System Status menu bar. The Bypass Control Command screen is displayed.
4. On the Bypass Control Command screen, select START HIGH ALERT.
5. Press the SELECT pushbutton on the Bypass Command menu bar.

   If the UPS is online, the UPS starts High Alert mode with the UPMs online supplying the critical load. After one hour the UPS transfers to Variable Module Management System mode.

   The Online status indicator is illuminated. The UPS status indicates HIGH ALERT. The UPM status indicates ONLINE. The power module is on.

### 7.3.15 Starting the UPMs

To start the power module without transferring the critical load to Online mode:

1. Unfasten the front door latch and swing the door open.
2. If the UPS contains input breaker CB1, verify that input breaker CB1 is open.
3. Close the UPS input feeder circuit breaker.
4. Close the UPS Bypass input feeder circuit breaker.
5. If the UPS contains input breaker CB1, close input breaker CB1.
6. Close the door and secure the latch.
7. Observe the UPS control panel becoming active, indicating logic power.
8. Press the CONTROLS pushbutton on the main menu bar. The System Status screen is displayed.
9. On the System Status screen, the UPS status should indicate SHUTDOWN and the UPM status should indicate OFFLINE.
10. Verify no alarms are active.
11. If UPM 4 (FI-UPM) is installed, proceed to Step 12; otherwise, proceed to Step 16.
12. On the System Status screen, select the UPM command. The UPS Control Command screen screen is displayed.
13. On the UPS Control Command screen, select the UPM 1 command.
14. Press the CONTROLS pushbutton on the UPS Control Command menu bar. The UPM 1 Control Command screen is displayed.
15. Proceed to Step 18.
16. On the System Status screen, select the UPM command.
17. Press the CONTROLS pushbutton on the UPS Control Command menu bar. The UPM 1 Control Command screen is displayed.
18. On the UPM 1 Control Command screen, select UPM ON.
19. Press the SELECT pushbutton on the UPM 1 Command menu bar.

**20.** Verify the following messages display sequentially on the UPM status line:

```
DC STARTING, CHARGER OFF
INVERTER STARTING
INVERTER SYNCING
READY
```

The UPM 1 rectifier and inverter turn on.

If UPM 4 (FI-UPM) is installed and the Inherent Redundancy option is enabled, a loss of redundancy alarm will be issued. Silence the alarm and continue to Step 21.

**21.** If UPM 4 (FI-UPM) is installed, repeat Steps 13 through 19 selecting `UPM 4` to start UPM 4.

**22.** Verify the following messages display sequentially on the UPM status line:

```
DC STARTING, CHARGER OFF
INVERTER STARTING
INVERTER SYNCING
READY
```

The UPM 4 rectifier and inverter turn on. When the inverter reaches full voltage, the UPS is ready to transfer to Online mode and supply the critical load.

***NOTE*** *To transfer to Online mode after starting individual UPMs, follow the procedure in paragraph 7.3.18.*

### 7.3.16 Starting a Single UPM

To start a single UPM:

**1.** Unfasten the front door latch and swing the door open.

**2.** If the UPS contains input breaker CB1, verify that input breaker CB1 is open.

**3.** Close the UPS input feeder circuit breaker.

**4.** Close the UPS Bypass input feeder circuit breaker.

**5.** If the UPS contains input breaker CB1, close input breaker CB1.

**6.** Close the door and secure the latch.

**7.** Observe the UPS control panel becoming active, indicating logic power.

**8.** Press the `CONTROLS` pushbutton on the main menu bar. The System Status screen is displayed.

**9.** On the System Status screen, the UPS status should indicate `SHUTDOWN` and the UPM status should indicate `OFFLINE`.

**10.** Verify no alarms are active.

**11.** If UPM 4 (FI-UPM) is installed, proceed to Step 12; otherwise, proceed to Step 16.

**12.** On the System Status screen, select the `UPM` command. The UPS Control Command screen screen is displayed.

13. On the UPS Control Command screen, select the UPM to start.
14. Press the CONTROLS pushbutton on the UPS Control Command menu bar. The UPM Control Command screen is displayed.
15. Proceed to Step 18.
16. On the System Status screen, select the UPM command.
17. Press the CONTROLS pushbutton on the UPS Control Command menu bar. The UPM Control Command screen is displayed.
18. On the UPM Control Command screen, select UPM ON.
19. Press the SELECT pushbutton on the UPM Command menu bar.
20. Verify the following messages display sequentially on the UPM status line:

    ```
    DC STARTING, CHARGER OFF
    INVERTER STARTING
    INVERTER SYNCING
    READY
    ```

    The UPM rectifier and inverter turn on.
21. To transfer the UPM to Online mode, press the CONTROLS pushbutton on the UPS Control Command menu bar. The UPM Control Command screen is displayed.
22. On the UPM Control Command screen, select UPM GO TO ONLINE.
23. Press the SELECT pushbutton on the UPM Command menu bar.

    The UPM transfers to Online mode. The UPM status indicates ONLINE.

### 7.3.17 Transfer from Online to Bypass Mode

To transfer the critical load to Bypass mode:

**CAUTION**

In Bypass mode, the critical load is not protected from commercial power interruptions and abnormalities.

1. Press the CONTROLS pushbutton on the main menu bar. The System Status screen is displayed.
2. On the System Status screen, select the BYPASS command.
3. Press the CONTROLS pushbutton on the System Status menu bar. The Bypass Control Command screen is displayed.
4. On the Bypass Control Command screen, select GO TO BYPASS.
5. Press the SELECT pushbutton on the Bypass Command menu bar.

   The UPS transfers to Bypass mode and the critical load is immediately supplied by the bypass source. If the bypass source is not available, the power module remains on and an alarm sounds.

   The BYPASS status indicator is illuminated. The Bypass status indicates ON. The UPM status indicates READY. The power module remains on.

**WARNING**

Power is present inside the UPS cabinet.

### 7.3.18 Transfer from Bypass to Online Mode

To transfer the critical load to Online mode:

1. If not already closed, close the battery breaker.
2. Press the CONTROLS pushbutton on the main menu bar. The System Status screen is displayed.
3. On the System Status screen, select the UPS command.
4. Press the CONTROLS pushbutton on the System Status menu bar. The UPS Control Command screen is displayed.
5. On the UPS Control Command screen, select GO TO ONLINE.
6. Press the SELECT pushbutton on the UPS Command menu bar.

   The UPS transfers to Online mode. If the power module is not available, the system remains on bypass and an alarm sounds.

   The Online status indicator is illuminated. The UPS status indicates ONLINE. The UPM status indicates ONLINE.

### 7.3.19 Transfer from Online to Bypass Mode and Shut Down UPMs

To transfer the critical load to Bypass mode and shut down the UPMs:

1. Transfer the critical load to bypass by performing the procedure in paragraph 7.3.17.
2. Press the CONTROLS pushbutton on the main menu bar. The System Status screen is displayed.
3. If UPM 4 (FI-UPM) is installed, proceed to Step 4; otherwise, proceed to Step 11.
4. On the System Status screen, select the UPM command. The UPS Control Command screen screen is displayed.
5. On the UPS Control Command screen, select the UPM 1 command.
6. Press the CONTROLS pushbutton on the UPS Control Command menu bar. The UPM 1 Control Command screen is displayed.
7. Proceed to Step 10.
8. On the System Status screen, select the UPM command.
9. Press the CONTROLS pushbutton on the System Status Command menu bar. The UPM 1 Control Command screen is displayed.
10. On the UPM 1 Control Command screen, select UPM OFF.
11. Press the SELECT pushbutton on the UPM 1 Command menu bar.

    The UPM status indicates READY. The input, output, and battery contactors open, and the power module remains on.

12. To turn off the power module, press the CONTROLS pushbutton on the UPS Control Command menu bar. The UPM 1 Control Command screen is displayed.
13. On the UPM 1 Control Command screen, select UPM OFF.
14. Press the SELECT pushbutton on the UPM 1 Command menu bar.

    The UPM status indicates SHUTDOWN. The power module is turned off.

    Logic power remains on.
15. If UPM 4 (FI-UPM) is installed, repeat Steps 5 through 14 selecting UPM 4 to shut down UPM 4.

**WARNING**

Power is present inside the UPS cabinet.

### 7.3.20 Single UPM Shutdown

To shut down a single UPM:

1. Press the CONTROLS pushbutton on the main menu bar. The System Status screen is displayed.
2. If UPM 4 (FI-UPM) is installed, proceed to Step 3; otherwise, proceed to Step 7.
3. On the System Status screen, select the UPM command. The UPS Control Command screen is displayed.
4. On the UPS Control Command screen, select the UPM to shut down.
5. Press the CONTROLS pushbutton on the UPS Control Command menu bar. The UPM Control Command screen is displayed.
6. Proceed to Step 9.
7. On the System Status screen, select the UPM command.
8. Press the CONTROLS pushbutton on the System Status Command menu bar. The UPM Control Command screen is displayed.
9. On the UPM Control Command screen, select UPM OFF.
10. Press the SELECT pushbutton on the UPM Command menu bar.

    The UPM status indicates READY. The input, output, and battery contactors open, and the power module remains on. The remaining UPMs supply the critical load.
11. To turn off the power module, press the CONTROLS pushbutton on the UPS Control Command menu bar. The UPM Control Command screen is displayed.
12. On the UPM Control Command screen, select UPM OFF.
13. Press the SELECT pushbutton on the UPM Command menu bar.

    The UPM status indicates SHUTDOWN. The power module is turned off. The remaining UPMs continue to supply the critical load.

    Logic power remains on.

### 7.3.21 Single UPM Restart

To restart a single UPM from a shutdown state:

1. Press the CONTROLS pushbutton on the main menu bar. The System Status screen is displayed.
2. If UPM 4 (FI-UPM) is installed, proceed to Step 3; otherwise, proceed to Step 7.
3. On the System Status screen, select the UPM command. The UPS Control Command screen screen is displayed.
4. On the UPS Control Command screen, select the UPM to restart.
5. Press the CONTROLS pushbutton on the UPS Control Command menu bar. The UPM Control Command screen is displayed.
6. Proceed to Step 9.
7. On the System Status screen, select the UPM command.
8. Press the CONTROLS pushbutton on the System Status Command menu bar. The UPM 1 Control Command screen is displayed.
9. On the UPM Control Command screen, select UPM ON.
10. Press the SELECT pushbutton on the UPM Command menu bar.
11. Verify the following messages display sequentially on the UPM status line:

    ```
    DC STARTING, CHARGER OFF
    INVERTER STARTING
    INVERTER SYNCING
    READY
    ```

    The UPM rectifier and inverter turn on.
12. To transfer the UPM to Online mode, press the CONTROLS pushbutton on the UPS Control Command menu bar. The UPM Control Command screen is displayed.
13. On the UPM Control Command screen, select UPM GO TO ONLINE.
14. Press the SELECT pushbutton on the UPM Command menu bar.

    The UPM transfers to Online mode. The UPM status indicates ONLINE.

### 7.3.22 UPS and Critical Load Shutdown

To perform maintenance or service on the critical load, shut down power to the load:

1. Turn off all equipment that is being powered by the UPS.
2. Perform the LOAD OFF procedure in paragraph 7.3.24.

   The input, output, battery, and bypass backfeed contactors open, and the power module is turned off.

**WARNING**

Power is present inside the UPS cabinet until the upstream input feeder circuit breaker is opened.

3. If the UPS contains input breaker CB1, open the UPS input breaker CB1.
4. Open the UPS input and bypass feeder circuit breakers.

### 7.3.23 Charger Control

To turn the battery charger on:

1. Press the CONTROLS pushbutton on the main menu bar. The System Status screen is displayed.
2. On the System Status screen, select the CHARGER command.
3. Press the CONTROLS pushbutton on the System Status menu bar. The Charger Control Command screen is displayed.
4. On the Charger Control Command screen, select CHARGER ON.
5. Press the SELECT pushbutton on the Charger Command menu bar.

To turn the battery charger off:

1. Press the CONTROLS pushbutton on the main menu bar. The System Status screen is displayed.
2. On the System Status screen, select the CHARGER command.
3. Press the CONTROLS pushbutton on the System Status menu bar. The Charger Control Command screen is displayed.
4. On the Charger Control Command screen, select CHARGER OFF.
5. Press the SELECT pushbutton on the Charger Command menu bar.

### 7.3.24 Using the UPS LOAD OFF Pushbutton or Command

A UPS Load Off is initiated by the LOAD OFF pushbutton from the main menu bar, the Load Off command on the UPS Control Command screen, or the Load Off command on the Bypass Control Command screen. The UPS LOAD OFF controls the UPS output by powering down the UPS and de-energizing the critical load.

The UPS (including Bypass) remains off until restarted.

To use the LOAD OFF pushbutton:

1. Press the LOAD OFF pushbutton.

   The Load Off screen is displayed, providing a choice to proceed or abort the shutdown.

**CAUTION**

All power to the critical load is lost when the LOAD OFF is selected in the following step. You should use this feature only when you want to de-energize the critical load.

2. To shut down the UPS, press LOAD OFF from the Load Off menu bar, and hold for three seconds. To abort the shutdown, press CANCEL.

   When LOAD OFF is selected and held for three seconds, the input, output, battery, and bypass backfeed contactors open, and the power module is turned off.

**CAUTION**

Do not attempt to restart the system after Load Off until the cause of the shutdown has been identified and cleared.

3. To restart the UPS after pressing the LOAD OFF pushbutton, follow the procedure in paragraph 7.3.1 or 7.3.8.

**WARNING**

Power is present inside the UPS cabinet until the upstream input feeder circuit breaker is opened.

To use the LOAD OFF command:

1. Press the CONTROLS pushbutton on the main menu bar. The System Status screen is displayed.
2. On the System Status screen, select either the UPS or the BYPASS command.
3. Press the CONTROLS pushbutton on the System Status menu bar. The UPS or Bypass Control Command screen is displayed.
4. On the Control Command screen, select LOAD OFF.
5. Press the SELECT pushbutton on the Command menu bar.

   The Load Off screen is displayed, providing a choice to proceed or abort the shutdown.

**CAUTION**

All power to the critical load is lost when the LOAD OFF is selected in the following step. You should use this feature only when you want to de-energize the critical load.

**6.** To shut down the UPS, press LOAD OFF from the Load Off menu bar, and hold for three seconds. To abort the shutdown, press CANCEL.

When LOAD OFF is selected and held for three seconds, the input, output, battery, and bypass backfeed contactors open, and the power module is turned off.

**CAUTION**

Do not attempt to restart the system after the Load Off until the cause of the shutdown has been identified and cleared.

**7.** To restart the UPS after pressing the LOAD OFF pushbutton, follow the procedure in paragraph 7.3.1 or 7.3.8.

**WARNING**

Power is present inside the UPS cabinet until the upstream input feeder circuit breaker is opened.

### 7.3.25 Using the Remote Emergency Power-off Switch

A UPS emergency power-off is initiated by the REPO pushbutton switch. In an emergency, you can use this switch to control the UPS output. The REPO switch de-energizes the critical load and powers down the UPS immediately, without asking for verification.

The UPS, including Bypass, remains off until restarted.

**CAUTION**

All power to the critical load is lost when the REPO switch is activated in the following step. You should use this feature only when you want to de-energize the critical load.

***NOTE*** *The following instructions are for the Eaton-supplied REPO switch. If a customer-supplied REPO switch is used, it may not activate in the same manner; refer to the operating instructions provided with the switch.*

To use the REPO switch:

1. Firmly push the red pushbutton until it locks into place. The switch latches into the activated state (see Figure 7-8).

   The input, output, and bypass backfeed contactors open, the battery breaker or disconnect is tripped, and the power module is turned off immediately, without asking for verification.

**CAUTION**

Do not attempt to restart the system after the REPO until the cause of the shutdown has been identified and cleared.

2. To deactivate the REPO switch in preparation for restarting the UPS, insert the supplied key and rotate clockwise until the red pushbutton releases (see Figure 7-8). To remove the key, rotate the key back to the vertical position.

3. Restart the UPS by following the procedure in paragraph 7.3.1 or 7.3.8.

**WARNING**

Power is present inside the UPS cabinet until the upstream input feeder circuit breaker is opened.

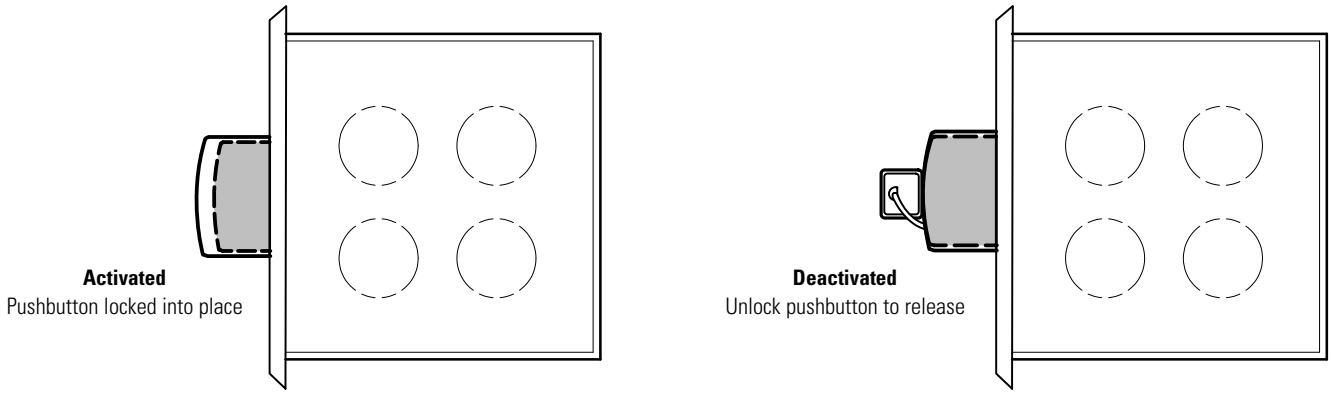


**Figure 7-8. REPO Operation**

## 7.4 Multiple UPS Distributed Bypass Operation

The paragraphs in this section provide operating instructions for a UPS system containing multiple UPSs.

***NOTE*** *A Field Installed UPM (FI-UPM) is always designated as UPM 4.*

### 7.4.1 Starting the Distributed Bypass System in Online Mode

To start the distributed bypass system:

1. Unfasten the front door latches and swing the doors open on all of the UPSs.
2. If the UPSs contain input breakers (CB1), verify that all input breakers are open.
3. Close all Module Output Breakers (MOBs).
4. Close all UPS input feeder circuit breakers.
5. Close all UPS Bypass input feeder circuit breakers.
6. If the UPSs contain input breakers (CB1), close all input breakers.
7. Close the doors and secure the latches.
8. Observe the UPS control panel displays becoming active, indicating logic power.
9. On any UPS, press the `CONTROLS` pushbutton on the main menu bar. The System Status screen is displayed.
10. On the System Status screen, verify the UPS status is `SHUTDOWN` and the UPM status is `SHUTDOWN`.
11. Close all battery breakers.
12. Verify no alarms are active.
13. On the System Status screen, select the `UPS` command.
14. Press the `CONTROLS` pushbutton on the System Status menu bar. The UPS Control Command screen is displayed.
15. On the UPS Control Command screen, select `GO TO ONLINE`.
16. Press the `SELECT` pushbutton on the UPS Command menu bar.

    If Auto Bypass is enabled (factory default), the critical load is immediately supplied by the bypass source in Bypass mode from all UPSs, until the inverter turns on and the UPSs transfer to Online mode. The status indicator on the UPS control panel indicates the UPS is in Bypass mode. If Auto Bypass is not enabled, the UPS outputs remain off until the UPSs transfer to Online mode.

**17.** Verify the following messages display sequentially on the UPS status line:

```
DC STARTING, CHARGER OFF
INVERTER STARTING
INVERTER SYNCING
ONLINE, CHARGER ON
```

The rectifier and inverter turn on. The inverter continues to ramp up to full voltage.

Once the inverter reaches full voltage, all UPS output contactors (K3) close and the bypass circuits open. Power is now supplied to the critical load in Online mode from all UPSs. It takes approximately one minute for the UPSs to achieve Online mode.

The Online status indicator is illuminated. The UPS status indicates `ONLINE`. The UPM status indicates `ONLINE, CHARGER ON`.

### 7.4.2 Enable Energy Saver System Mode from the UPS Command Menu

To enable Energy Saver System mode:

***NOTE*** *The Energy Saver System mode commands are displayed only if enabled at the factory or by an Eaton Customer Service Engineer.*

***NOTE*** *The Variable Module Management System and Energy Saver System modes are mutually exclusive. If the Variable Module Management System mode is enabled, the Energy Saver System mode commands will not be displayed.*

**1.** Press the `CONTROLS` pushbutton on the main menu bar. The System Status screen is displayed.

**2.** On the System Status screen, select the `UPS` command.

**3.** Press the `CONTROLS` pushbutton on the System Status menu bar. The UPS Control Command screen is displayed.

**4.** On the UPS Control Command screen, select `ENABLE ENERGY SAVER`.

**5.** Press the `SELECT` pushbutton on the UPS Command menu bar.

The UPS transfers to Energy Saver System mode.

The Online status indicator is illuminated. The UPS status indicates `ONLINE WITH ESS`. The UPM status indicates `ONLINE`. If the battery is not charging, the power module is off.

### 7.4.3 Disable Energy Saver System Mode from the UPS Command Menu

To disable Energy Saver System mode:

***NOTE*** *The Energy Saver System mode commands are displayed only if enabled at the factory or by an Eaton Customer Service Engineer.*

***NOTE*** *The Variable Module Management System and Energy Saver System modes are mutually exclusive. If the Variable Module Management System mode is enabled, the Energy Saver System mode commands will not be displayed.*

1. Press the `CONTROLS` pushbutton on the main menu bar. The System Status screen is displayed.
2. On the System Status screen, select the `UPS` command.
3. Press the `CONTROLS` pushbutton on the System Status menu bar. The UPS Control Command screen is displayed.
4. On the UPS Control Command screen, select `DISABLE ENERGY SAVER`.
5. Press the `SELECT` pushbutton on the UPS Command menu bar.

   The UPS transfers to Battery mode and then to Online mode.

   The Online status indicator is illuminated. The UPS status indicates `ONLINE`. The UPM status indicates `ONLINE`.

### 7.4.4 Start Energy Saver System High Alert Mode from the UPS Command Menu

To start High Alert mode:

***NOTE*** *The High Alert mode commands are displayed only if enabled at the factory or by an Eaton Customer Service Engineer.*

***NOTE*** *The Variable Module Management System and Energy Saver System modes are mutually exclusive. If the Variable Module Management System mode is enabled, the Energy Saver System mode commands will not be displayed.*

1. Press the `CONTROLS` pushbutton on the main menu bar. The System Status screen is displayed.
2. On the System Status screen, select the `UPS` command.
3. Press the `CONTROLS` pushbutton on the System Status menu bar. The UPS Control Command screen is displayed.
4. On the UPS Control Command screen, select `START HIGH ALERT`.
5. Press the `SELECT` pushbutton on the UPS Command menu bar.

   The UPS starts High Alert mode with the UPMs online supplying the critical load. After one hour the UPS transfers to Energy Saver System mode.

   The Online status indicator is illuminated. The UPS status indicates `HIGH ALERT`. The UPM status indicates `ONLINE`. The power module is on.

### 7.4.5 Enable Variable Module Management System Mode from the UPS Command Menu

To enable Variable Module Management System mode:

***NOTE*** *The Variable Module Management System mode commands are displayed only if enabled at the factory or by an Eaton Customer Service Engineer.*

***NOTE*** *The Variable Module Management System and Energy Saver System modes are mutually exclusive. If the Energy Saver System mode is enabled, the Variable Module Management System mode commands will not be displayed.*

1. Press the `CONTROLS` pushbutton on the main menu bar. The System Status screen is displayed.
2. On the System Status screen, select the `UPS` command.
3. Press the `CONTROLS` pushbutton on the System Status menu bar. The UPS Control Command screen is displayed.
4. On the UPS Control Command screen, select `ENABLE VAR MODULE MANAGEMENT`.
5. Press the `SELECT` pushbutton on the UPS Command menu bar.

   The UPS transfers to Variable Module Management System mode. In approximately twenty seconds the UPS calculates the required number of UPMs needed to support the load.

   The Online status indicator is illuminated. The UPS status indicates `ONLINE + VMMS`. The UPM status indicates `ONLINE`.

### 7.4.6 Disable Variable Module Management System Mode from the UPS Command Menu

To disable Variable Module Management System mode:

***NOTE*** *The Variable Module Management System mode commands are displayed only if enabled at the factory or by an Eaton Customer Service Engineer.*

***NOTE*** *The Variable Module Management System and Energy Saver System modes are mutually exclusive. If the Energy Saver System mode is enabled, the Variable Module Management System mode commands will not be displayed.*

1. Press the `CONTROLS` pushbutton on the main menu bar. The System Status screen is displayed.
2. On the System Status screen, select the `UPS` command.
3. Press the `CONTROLS` pushbutton on the System Status menu bar. The UPS Control Command screen is displayed.
4. On the UPS Control Command screen, select `DISABLE VAR MODULE MANAGEMENT`.
5. Press the `SELECT` pushbutton on the UPS Command menu bar.

   The UPS transfers to Battery mode and then to Online mode in approximately ten seconds.

   The Online status indicator is illuminated. The UPS status indicates `ONLINE`. The UPM status indicates `ONLINE`.

### 7.4.7 Start Variable Module Management System High Alert Mode from the UPS Command Menu

To start High Alert mode:

***NOTE*** *The High Alert mode commands are displayed only if enabled at the factory or by an Eaton Customer Service Engineer.*

***NOTE*** *The Variable Module Management System and Energy Saver System modes are mutually exclusive. If the Energy Saver System mode is enabled, the Variable Module Management System mode commands will not be displayed.*

1. Press the `CONTROLS` pushbutton on the main menu bar. The System Status screen is displayed.
2. On the System Status screen, select the `UPS` command.
3. Press the `CONTROLS` pushbutton on the System Status menu bar. The UPS Control Command screen is displayed.
4. On the UPS Control Command screen, select `START HIGH ALERT`.
5. Press the `SELECT` pushbutton on the UPS Command menu bar.

   The UPS starts High Alert mode with the UPMs online supplying the critical load. After one hour the UPS transfers to Variable Module Management System mode.

   The Online status indicator is illuminated. The UPS status indicates `HIGH ALERT`. The UPM status indicates `ONLINE`. The power module is on.

### 7.4.8 Starting the Distributed Bypass System in Bypass Mode

If the inverter output of the distributed bypass system is not available and the critical load needs to be energized:

**CAUTION**

In Bypass mode, the critical load is not protected from commercial power interruptions and abnormalities.

1. Unfasten the front door latches and swing the doors open on all of the UPSs.
2. If the UPSs contain input breakers (CB1), verify that all input breakers are open.
3. Close all MOBs.
4. Close all UPS input feeder circuit breakers.
5. Close all UPS Bypass input feeder circuit breakers.
6. If the UPSs contain input breakers (CB1), close all input breakers.
7. Close the doors and secure the latches.
8. Observe the UPS control panel displays becoming active, indicating logic power.
9. On any UPS, press the `CONTROLS` pushbutton on the main menu bar. The System Status screen is displayed.
10. On the System Status screen, verify the UPS status is `SHUTDOWN` and the UPM status is `SHUTDOWN`.

11. On the System Status screen, select the BYPASS command.
12. Press the CONTROLS pushbutton on the System Status menu bar. The Bypass Control Command screen is displayed.
13. On the Bypass Control Command screen, select GO TO BYPASS.
14. Press the SELECT pushbutton on the Bypass Command menu bar.

    The critical load is immediately supplied by the bypass source in Bypass mode from all UPSs.

    The BYPASS status indicator is illuminated. The Bypass status indicates ON. The UPM status indicates SHUTDOWN, CLOSE BATTERY.

### 7.4.9 Enable Energy Saver System Mode from the Bypass Command Menu

To enable Energy Saver System mode:

***NOTE*** *The Energy Saver System mode commands are displayed only if enabled at the factory or by an Eaton Customer Service Engineer.*

***NOTE*** *The Variable Module Management System and Energy Saver System modes are mutually exclusive. If the Variable Module Management System mode is enabled, the Energy Saver System mode commands will not be displayed.*

1. Press the CONTROLS pushbutton on the main menu bar. The System Status screen is displayed.
2. On the System Status screen, select the BYPASS command.
3. Press the CONTROLS pushbutton on the System Status menu bar. The Bypass Control Command screen is displayed.
4. On the Bypass Control Command screen, select ENABLE ENERGY SAVER.
5. Press the SELECT pushbutton on the Bypass Command menu bar.

   If the UPS is online, the UPS transfers to Energy Saver System mode.

   The Online status indicator is illuminated. The UPS status indicates ONLINE WITH ESS. The UPM status indicates ONLINE. If the battery is not charging, the power module is off.

### 7.4.10 Disable Energy Saver System Mode from the Bypass Command Menu

To disable Energy Saver System mode:

***NOTE*** *The Energy Saver System mode commands are displayed only if enabled at the factory or by an Eaton Customer Service Engineer.*

***NOTE*** *The Variable Module Management System and Energy Saver System modes are mutually exclusive. If the Variable Module Management System mode is enabled, the Energy Saver System mode commands will not be displayed.*

1. Press the CONTROLS pushbutton on the main menu bar. The System Status screen is displayed.
2. On the System Status screen, select the BYPASS command.

3. Press the CONTROLS pushbutton on the System Status menu bar. The Bypass Control Command screen is displayed.
4. On the Bypass Control Command screen, select DISABLE ENERGY SAVER.
5. Press the SELECT pushbutton on the Bypass Command menu bar.

   If the UPS is online, the UPS transfers to Battery mode and then to Online mode.

   The Online status indicator is illuminated. The UPS status indicates ONLINE. The UPM status indicates ONLINE.

### 7.4.11 Start Energy Saver System High Alert Mode from the Bypass Command Menu

To start High Alert mode:

***NOTE*** *The High Alert mode commands are displayed only if enabled at the factory or by an Eaton Customer Service Engineer.*

***NOTE*** *The Variable Module Management System and Energy Saver System modes are mutually exclusive. If the Variable Module Management System mode is enabled, the Energy Saver System mode commands will not be displayed.*

1. Press the CONTROLS pushbutton on the main menu bar. The System Status screen is displayed.
2. On the System Status screen, select the BYPASS command.
3. Press the CONTROLS pushbutton on the System Status menu bar. The Bypass Control Command screen is displayed.
4. On the Bypass Control Command screen, select START HIGH ALERT.
5. Press the SELECT pushbutton on the Bypass Command menu bar.

   If the UPS is online, the UPS starts High Alert mode with the UPMs online supplying the critical load. After one hour the UPS transfers to Energy Saver System mode.

   The Online status indicator is illuminated. The UPS status indicates HIGH ALERT. The UPM status indicates ONLINE. The power module is on.

### 7.4.12 Enable Variable Module Management System Mode from the Bypass Command Menu

To enable Variable Module Management System mode:

***NOTE*** *The Variable Module Management System mode commands are displayed only if enabled at the factory or by an Eaton Customer Service Engineer.*

***NOTE*** *The Variable Module Management System and Energy Saver System modes are mutually exclusive. If the Energy Saver System mode is enabled, the Variable Module Management System mode commands will not be displayed.*

1. Press the CONTROLS pushbutton on the main menu bar. The System Status screen is displayed.
2. On the System Status screen, select the BYPASS command.

3. Press the CONTROLS pushbutton on the System Status menu bar. The Bypass Control Command screen is displayed.
4. On the Bypass Control Command screen, select ENABLE VAR MODULE MANAGEMENT.
5. Press the SELECT pushbutton on the Bypass Command menu bar.

   If the UPS is online, the UPS transfers to Variable Module Management System mode. In approximately twenty seconds the UPS calculates the required number of UPMs needed to support the load.

   The Online status indicator is illuminated. The UPS status indicates ONLINE + VMMS. The UPM status indicates ONLINE.

### 7.4.13 Disable Variable Module Management System Mode from the Bypass Command Menu

To disable Variable Module Management System mode:

***NOTE*** *The Variable Module Management System mode commands are displayed only if enabled at the factory or by an Eaton Customer Service Engineer.*

***NOTE*** *The Variable Module Management System and Energy Saver System modes are mutually exclusive. If the Energy Saver System mode is enabled, the Variable Module Management System mode commands will not be displayed.*

1. Press the CONTROLS pushbutton on the main menu bar. The System Status screen is displayed.
2. On the System Status screen, select the BYPASS command.
3. Press the CONTROLS pushbutton on the System Status menu bar. The Bypass Control Command screen is displayed.
4. On the Bypass Control Command screen, select DISABLE VAR MODULE MANAGEMENT.
5. Press the SELECT pushbutton on the Bypass Command menu bar.

   If the UPS is online, the UPS transfers to Battery mode and then to Online mode in approximately ten seconds.

   The Online status indicator is illuminated. The UPS status indicates ONLINE. The UPM status indicates ONLINE.

### 7.4.14 Start Variable Module Management System High Alert Mode from the Bypass Command Menu

To start High Alert mode:

***NOTE*** *The High Alert mode commands are displayed only if enabled at the factory or by an Eaton Customer Service Engineer.*

***NOTE*** *The Variable Module Management System and Energy Saver System modes are mutually exclusive. If the Energy Saver System mode is enabled, the Variable Module Management System mode commands will not be displayed.*

1. Press the `CONTROLS` pushbutton on the main menu bar. The System Status screen is displayed.
2. On the System Status screen, select the `BYPASS` command.
3. Press the `CONTROLS` pushbutton on the System Status menu bar. The Bypass Control Command screen is displayed.
4. On the Bypass Control Command screen, select `START HIGH ALERT`.
5. Press the `SELECT` pushbutton on the Bypass Command menu bar.

   If the UPS is online, the UPS starts High Alert mode with the UPMs online supplying the critical load. After one hour the UPS transfers to Variable Module Management System mode.

   The Online status indicator is illuminated. The UPS status indicates `HIGH ALERT`. The UPM status indicates `ONLINE`. The power module is on.

### 7.4.15 Starting the UPS UPMs

To start the power modules without transferring the critical load to Online mode:

1. Unfasten the front door latches and swing the doors open on all of the UPSs.
2. If the UPSs contain input breakers (CB1), verify that all input breakers are open.
3. Close all UPS input feeder circuit breakers.
4. Close all UPS Bypass input feeder circuit breakers.
5. If the UPSs contain input breakers (CB1), close all input breakers.
6. Close the doors and secure the latches.
7. Observe the UPS control panel displays becoming active, indicating logic power.
8. On any UPS, press the `CONTROLS` pushbutton on the main menu bar. The System Status screen is displayed.
9. On the System Status screen, verify the UPS status is `SHUTDOWN` and the UPM status is `OFFLINE`.
10. Verify no alarms are active.
11. If UPM 4 (FI-UPM) is installed, proceed to Step 12; otherwise, proceed to Step 16.

12. On the System Status screen, select the `UPM` command. The UPS Control Command screen is displayed.
13. On the UPS Control Command screen, select the `UPM 1` command.
14. Press the `CONTROLS` pushbutton on the UPS Control Command menu bar. The UPM 1 Control Command screen is displayed.
15. Proceed to Step 18.
16. On the System Status screen, select the `UPM` command.
17. Press the `CONTROLS` pushbutton on the System Status Command menu bar. The UPM 1 Control Command screen is displayed.
18. On the UPM 1 Control Command screen, select `UPM ON`.
19. Press the `SELECT` pushbutton on the UPM 1 Command menu bar.
20. Verify the following messages display sequentially on the UPM status line:

    ```
    DC STARTING, CHARGER OFF
    INVERTER STARTING
    INVERTER SYNCING
    READY
    ```

    The UPM 1 rectifier and inverter turn on.

    If UPM 4 (FI-UPM) is installed and the Inherent Redundancy option is enabled, a loss of redundancy alarm will be issued. Silence the alarm and continue to Step 21.
21. If UPM 4 (FI-UPM) is installed, repeat Steps 13 through 19 selecting `UPM 4` to start UPM 4.
22. Verify the following messages display sequentially on the UPM status line:

    ```
    DC STARTING, CHARGER OFF
    INVERTER STARTING
    INVERTER SYNCING
    READY
    ```

    The UPM 4 rectifier and inverter turn on. When the inverter reaches full voltage, the UPS is ready to transfer to the Online mode and supply the critical load.
23. Repeat Steps 1 through 22 for each UPS in the distributed bypass system.

***NOTE*** *To transfer to Online mode after starting individual UPMs, follow the procedure in paragraph 7.4.18.*

### 7.4.16 Starting a Single UPM

To start a single UPM:

1. Unfasten the front door latch and swing the door open.
2. If the UPS contains input breaker CB1, verify that input breaker CB1 is open.
3. Close the UPS input feeder circuit breaker.
4. Close the UPS Bypass input feeder circuit breaker.

5. If the UPS contains input breaker CB1, close input breaker CB1.
6. Close the door and secure the latch.
7. Observe the UPS control panel becoming active, indicating logic power.
8. Press the `CONTROLS` pushbutton on the main menu bar. The System Status screen is displayed.
9. On the System Status screen, the UPS status should indicate `SHUTDOWN` and the UPM status should indicate `OFFLINE`.
10. Verify no alarms are active.
11. If UPM 4 (FI-UPM) is installed, proceed to Step 12; otherwise, proceed to Step 16.
12. On the System Status screen, select the `UPM` command. The UPS Control Command screen screen is displayed.
13. On the UPS Control Command screen, select the UPM to start.
14. Press the `CONTROLS` pushbutton on the UPS Control Command menu bar. The UPM Control Command screen is displayed.
15. Proceed to Step 18.
16. On the System Status screen, select the `UPM` command.
17. Press the `CONTROLS` pushbutton on the System Status Command menu bar. The UPM Control Command screen is displayed.
18. On the UPM Control Command screen, select `UPM ON`.
19. Press the `SELECT` pushbutton on the UPM Command menu bar.
20. Verify the following messages display sequentially on the UPM status line:

    ```
    DC STARTING, CHARGER OFF
    INVERTER STARTING
    INVERTER SYNCING
    READY
    ```

    The UPM rectifier and inverter turn on.
21. To transfer the UPM to Online mode, press the `CONTROLS` pushbutton on the UPS Control Command menu bar. The UPM Control Command screen is displayed.
22. On the UPM Control Command screen, select `UPM GO TO ONLINE`.
23. Press the `SELECT` pushbutton on the UPM Command menu bar.

    The UPM transfers to Online mode. The UPM status indicates `ONLINE`.

### 7.4.17 Transfer from Online to Bypass Mode

To transfer the critical load to Bypass mode:

**CAUTION**

In Bypass mode, the critical load is not protected from commercial power interruptions and abnormalities.

1. On any UPS, press the CONTROLS pushbutton on the main menu bar. The System Status screen is displayed.
2. On the System Status screen, select the BYPASS command.
3. Press the CONTROLS pushbutton on the System Status menu bar. The Bypass Control Command screen is displayed.
4. On the Bypass Control Command screen, select GO TO BYPASS.
5. Press the SELECT pushbutton on the Bypass Command menu bar.

   All of the UPSs transfer to Bypass mode and the critical load is immediately supplied by the bypass source. If the bypass source is not available, the power module remains on and an alarm sounds.

   The BYPASS status indicator is illuminated. The Bypass status indicates ON. The UPM status indicates READY. The power module remains on.

**WARNING**

Power is present inside the UPS cabinet.

### 7.4.18 Transfer from Bypass to Online Mode

To transfer the critical load to Online mode:

1. If not already closed, close the battery breaker.
2. On any UPS, press the CONTROLS pushbutton on the main menu bar. The System Status screen is displayed.
3. On the System Status screen, select the UPS command.
4. Press the CONTROLS pushbutton on the System Status menu bar. The UPS Control Command screen is displayed.
5. On the UPS Control Command screen, select GO TO ONLINE.
6. Press the SELECT pushbutton on the UPS Command menu bar.

   All of the UPSs transfer to Online mode. If the power module is not available, the system remains on bypass and an alarm sounds.

   The Online status indicator is illuminated. The UPS status indicates ONLINE. The UPM status indicates ONLINE.

### 7.4.19 Transfer from Online to Bypass Mode and Shut Down UPMs

To transfer the critical load to Bypass mode and shut down all UPMs:

1. Transfer the critical load to bypass by performing the procedure in paragraph 7.4.17.
2. Press the CONTROLS pushbutton on the main menu bar. The System Status screen is displayed.
3. If UPM 4 (FI-UPM) is installed, proceed to Step 4; otherwise, proceed to Step 8.
4. On the System Status screen, select the UPM command. The UPS Control Command screen screen is displayed.
5. On the UPS Control Command screen, select the UPM 1 command.
6. Press the CONTROLS pushbutton on the UPS Control Command menu bar. The UPM 1 Control Command screen is displayed.
7. Proceed to Step 10.
8. On the System Status screen, select the UPM command.
9. Press the CONTROLS pushbutton on the System Status Command menu bar. The UPM 1 Control Command screen is displayed.
10. On the UPM 1 Control Command screen, select UPM OFF.
11. Press the SELECT pushbutton on the UPM 1 Command menu bar.

    The UPM status indicates READY. The input, output, and battery contactors open, and the power module remains on.
12. To turn off the power module, press the CONTROLS pushbutton on the UPS Control Command menu bar. The UPM 1 Control Command screen is displayed.
13. On the UPM 1 Control Command screen, select UPM OFF.
14. Press the SELECT pushbutton on the UPM 1 Command menu bar.

    The UPM status indicates SHUTDOWN. The power module is turned off.

    Logic power remains on.
15. If UPM 4 (FI-UPM) is installed, repeat Steps 5 through 14 selecting UPM 4 to shut down UPM 4.
16. Repeat Steps 2 through 15 for each UPS in the distributed bypass system.

**WARNING**

Power is present inside the UPS cabinet.

### 7.4.20 Single UPM Shutdown

To shut down a single UPM:

1. Press the CONTROLS pushbutton on the main menu bar. The System Status screen is displayed.
2. If UPM 4 (FI-UPM) is installed, proceed to Step 3; otherwise, proceed to Step 7.

3. On the System Status screen, select the UPM Command. The UPS Control Command screen is displayed.
4. On the UPS Control Command screen, select the UPM to shut down.
5. Press the CONTROLS pushbutton on the UPS Control Command menu bar. The UPM Control Command screen is displayed.
6. Proceed to Step 9.
7. On the System Status screen, select the UPM command.
8. Press the CONTROLS pushbutton on the System Status Command menu bar. The UPM Control Command screen is displayed.
9. On the UPM Control Command screen, select UPM OFF.
10. Press the SELECT pushbutton on the UPM Command menu bar.

    The UPM status indicates READY. The input, output, and battery contactors open, and the power module remains on. The remaining UPMs supply the critical load.
11. To turn off the power module, press the CONTROLS pushbutton on the UPS Control Command menu bar. The UPM Control Command screen is displayed.
12. On the UPM Control Command screen, select UPM OFF.
13. Press the SELECT pushbutton on the UPM Command menu bar.

    The UPM status indicates SHUTDOWN. The power module is turned off. The remaining UPMs continue to supply the critical load.

    Logic power remains on.

### 7.4.21 Single UPM Restart

To restart a single UPM from a shutdown state:

1. Press the CONTROLS pushbutton on the main menu bar. The System Status screen is displayed.
2. If UPM 4 (FI-UPM) is installed, proceed to Step 3; otherwise, proceed to Step 7.
3. On the System Status screen, select the UPM command. The UPS Control Command screen screen is displayed.
4. On the UPS Control Command screen, select the UPM to restart.
5. Press the CONTROLS pushbutton on the UPS Control Command menu bar. The UPM Control Command screen is displayed.
6. Proceed to Step 9.
7. On the System Status screen, select the UPM command.
8. Press the CONTROLS pushbutton on the System Status Command menu bar. The UPM Control Command screen is displayed.
9. On the UPM Control Command screen, select UPM ON.
10. Press the SELECT pushbutton on the UPM Command menu bar.

11. Verify the following messages display sequentially on the UPM status line:

    ```
    DC STARTING, CHARGER OFF
    INVERTER STARTING
    INVERTER SYNCING
    READY
    ```

    The UPM rectifier and inverter turn on.

12. To transfer the UPM to Online mode, press the CONTROLS pushbutton on the UPS Control Command menu bar. The UPM Control Command screen is displayed.

13. On the UPM Control Command screen, select UPM GO TO ONLINE.

14. Press the SELECT pushbutton on the UPM Command menu bar.

    The UPM transfers to Online mode. The UPM status indicates ONLINE.

### 7.4.22 Single UPS Shutdown using Load Off

***NOTE*** *To shut down a single UPS, MOBs with dual auxiliary contacts must be installed and connected according to the procedure in paragraph 5.3.*

To shut down a single UPS:

1. Open the MOB for the UPS being shut down.

2. On the UPS to shut down, press the CONTROLS pushbutton on the main menu bar. The System Status screen is displayed.

3. On the System Status screen, select the BYPASS command.

4. Press the CONTROLS pushbutton on the System Status menu bar. The Bypass Control Command screen is displayed.

5. On the Bypass Control Command screen, select GO TO BYPASS.

6. Press the SELECT pushbutton on the Bypass Command menu bar.

   The UPS being shut down transfers to Bypass mode.

   The BYPASS status indicator is illuminated. The Bypass status indicates ON. The UPM status indicates READY. The power module remains on.

***NOTE*** *Load Off will turn off only the UPS being shut down. The remaining UPSs will remain online supplying power to the critical load.*

7. Perform the LOAD OFF procedure in paragraph 7.4.27 on the UPS being shut down.

   The input, output, battery, and bypass backfeed contactors open, and the power module is turned off on the UPS being shut down.

   Logic power remains on.

8. Verify the battery breaker or disconnect for the UPS being shut down is open. If not, open the breaker.

**WARNING**

Power is present inside the UPS cabinet until the upstream input feeder circuit breaker is opened.

***NOTE*** *If the UPS contains an input breaker (CB1), DO NOT open the breaker unless no input feeder breaker is installed.*

**9.** Open the input and bypass feeder circuit breakers for the UPS being shut down.

The UPS is now completely shut down.

External Communications Failure alarm is active on remaining online UPSs. This is an expected event and will clear upon UPS restart.

### 7.4.23 Single UPS Shutdown using UPM Shutdown

***NOTE*** *To shut down a single UPS, MOBs with dual auxiliary contacts must be installed and connected according to the procedure in paragraph 5.3.*

To shut down a single UPS:

**1.** Open the MOB for the UPS being shut down.

**2.** On the UPS being shut down, press the `CONTROLS` pushbutton on the main menu bar. The System Status screen is displayed.

**3.** On the System Status screen, select the `BYPASS` command.

**4.** Press the `CONTROLS` pushbutton on the System Status menu bar. The Bypass Control Command screen is displayed.

**5.** On the Bypass Control Command screen, select `GO TO BYPASS`.

**6.** Press the `SELECT` pushbutton on the Bypass Command menu bar.

The UPS being shut down transfer to Bypass mode.

The `BYPASS` status indicator is illuminated. The Bypass status indicates `ON`. The UPM status indicates `READY`. The power module remains on.

**7.** If UPM 4 (FI-UPM) is installed, proceed to Step 8; otherwise, proceed to Step 12.

**8.** On the System Status screen, select the `UPM` command. The UPS Control Command screen is displayed.

**9.** On the UPS Control Command screen, select the `UPM 1` command.

**10.** Press the `CONTROLS` pushbutton on the UPS Control Command menu bar. The UPM 1 Control Command screen is displayed.

**11.** Proceed to Step 14.

**12.** On the System Status screen, select the `UPM` command.

**13.** Press the `CONTROLS` pushbutton on the System Status Command menu bar. The UPM 1 Control Command screen is displayed.

**14.** On the UPM 1 Control Command screen, select `UPM OFF`.

15. Press the SELECT pushbutton on the UPM 1 Command menu bar.

    The UPM status indicates SHUTDOWN. The input, output, and battery contactors open, and the power module is turned off.

    Logic power remains on.

16. If UPM 4 (FI-UPM) is installed, repeat Steps 9 through 15 selecting UPM 4 to shut down UPM 4.

17. Verify the battery breaker or disconnect for the UPS being shut down is open. If not, open the breaker.

**WARNING**

Power is present inside the UPS cabinet until the upstream input feeder circuit breaker is opened.

***NOTE*** *If the UPS contains an input breaker (CB1), DO NOT open the breaker unless no input feeder breaker is installed.*

18. Open the input and bypass feeder circuit breakers for the UPS being shut down.

    The UPS is now completely shut down.

    External Communications Failure alarm is active on remaining online UPSs. This is an expected event and will clear upon UPS restart.

### 7.4.24 Single UPS Restart

To restart a single UPS from a shutdown state:

1. Close the MOB for the UPS being restarted.
2. Close UPS input and bypass feeder circuit breakers for the UPS being restarted.
3. Unfasten the front door latch and swing the door open on the UPS being restarted.
4. If input breaker (CB1) is installed on the UPS being restarted and is open, close the breaker.
5. Close the door and secure the latch.
6. On the UPS being restarted, observe the UPS control panel display becoming active, indicating logic power.
7. On the UPS being restarted, press the CONTROLS pushbutton on the main menu bar. The System Status screen is displayed.
8. On the System Status screen, verify the UPS status is SHUTDOWN and the UPM status is SHUTDOWN.
9. Close the battery breaker for the UPS being restarted.
10. Verify no alarms are active on UPS being restarted.
11. Verify the External Communications Failure alarm has cleared and no other alarms are active on the online UPSs.
12. On the System Status screen, select the UPS command.

13. Press the `CONTROLS` pushbutton on the System Status menu bar. The UPS Control Command screen is displayed.

14. On the UPS Control Command screen, select `GO TO ONLINE`.

15. Press the `SELECT` pushbutton on the UPS Command menu bar.

***NOTE*** *If the UPS is starting on a bus with other online paralleled UPSs, the UPS will not go to bypass during startup. The UPS will start, sync to the other UPSs online, and go online.*

16. Verify the following messages display sequentially on the UPS status line:

```
DC STARTING, CHARGER OFF
INVERTER STARTING
INVERTER SYNCING
ONLINE, CHARGER ON
```

The rectifier and inverter turn on. The inverter continues to ramp to full voltage.

Once the inverter reaches full voltage, the UPS output contactor (K3) closes. Power is now supplied to the critical load in Online mode along with the other UPSs online. It takes approximately one minute for the UPS to achieve Online mode.

The Online status indicator is illuminated. The UPS status indicates `ONLINE`. The UPM status indicates `ONLINE, CHARGER ON`.

### 7.4.25 UPS and Critical Load Shutdown

To perform maintenance or service on the critical load, shut down power to the load:

1. Turn off all equipment that is being powered by the distributed bypass system.

2. Transfer the UPSs to bypass by performing the procedure in paragraph 7.4.17.

3. Perform the LOAD OFF procedure in paragraph 7.4.27.

   The input, output, battery, and bypass backfeed contactors open, and the power module is turned off.

**WARNING**

Power is present inside the UPS cabinet until the upstream input feeder circuit breaker is opened.

4. If the UPSs contain input breakers (CB1), open all UPS input breakers.

5. Open the input and bypass feeder circuit breakers on all UPSs.

### 7.4.26 Charger Control

To turn the battery charger on:

1. Press the `CONTROLS` pushbutton on the main menu bar. The System Status screen is displayed.

2. On the System Status screen, select the `CHARGER` command.

3. Press the `CONTROLS` pushbutton on the System Status menu bar. The Charger Control Command screen is displayed.

4. On the Charger Control Command screen, select CHARGER ON.
5. Press the SELECT pushbutton on the Charger Command menu bar.

To turn the battery charger off:

1. Press the CONTROLS pushbutton on the main menu bar. The System Status screen is displayed.
2. On the System Status screen, select the CHARGER command.
3. Press the CONTROLS pushbutton on the System Status menu bar. The Charger Control Command screen is displayed.
4. On the Charger Control Command screen, select CHARGER OFF.
5. Press the SELECT pushbutton on the Charger Command menu bar.

### 7.4.27 Using the UPS LOAD OFF Pushbutton or Command

A UPS Load Off is initiated by the LOAD OFF pushbutton from the main menu bar, the Load Off command on the UPS Control Command screen, or the Load Off command on the Bypass Control Command screen. The UPS LOAD OFF controls the UPSs' outputs by powering down the UPS and de-energizing the critical load.

The UPSs (including Bypass) remain off until restarted.

***NOTE*** *The UPS Load Off controls each UPS independently and does not shut down the whole distributed bypass system unless all UPSs have been transferred to bypass. To immediately shut down the whole system, use the REPO switch (see paragraph 7.4.28).*

To use the LOAD OFF pushbutton:

1. Press the LOAD OFF pushbutton on the UPS to shut down.

   The Load Off screen is displayed, providing a choice to proceed or abort the shutdown.

**CAUTION**

All power to the critical load is lost when the LOAD OFF is selected in the following step. You should use this feature only when you want to de-energize the critical load.

2. To shut down the UPS, press LOAD OFF from the Load Off menu bar, and hold for three seconds. To abort the shutdown, press CANCEL.

   When LOAD OFF is selected and held for three seconds, the input, output, battery, and bypass backfeed contactors open, and the power module is turned off on the UPS.

3. If another UPS is to be shut down, proceed to that UPS and repeat Steps 1 and 2.

**CAUTION**

Do not attempt to restart the system after Load Off until the cause of the shutdown has been identified and cleared.

4. Restart the UPS after pressing the LOAD OFF pushbutton by following the procedure in paragraph 7.4.1 or 7.4.8.

**WARNING**

Power is present inside the UPS cabinet until the upstream input feeder circuit breaker is opened.

To use the LOAD OFF command:

1. Press the CONTROLS pushbutton on the main menu bar of the UPS to be shut down. The System Status screen is displayed.
2. On the System Status screen, select either the UPS or the BYPASS command.
3. Press the CONTROLS pushbutton on the System Status menu bar. The UPS or Bypass Control Command screen is displayed.
4. On the Control Command screen, select LOAD OFF.
5. Press the SELECT pushbutton on the Command menu bar.

   The Load Off screen is displayed, providing a choice to proceed or abort the shutdown.

**CAUTION**

All power to the critical load is lost when LOAD OFF is selected in the following step. You should use this feature only when you want to de-energize the critical load.

6. To shut down the UPS, press LOAD OFF from the Load Off menu bar, and hold for three seconds. To abort the shutdown, press CANCEL.

   When LOAD OFF is selected and held for three seconds, the input, output, battery, and bypass backfeed contactors open, and the power module is turned off on the UPS.
7. If another UPS is to be shut down, proceed to that UPS and repeat Steps 1 through 6.

**CAUTION**

Do not attempt to restart the system after the Load Off until the cause of the shutdown has been identified and cleared.

8. Restart the UPS after pressing the LOAD OFF pushbutton by following the procedure in paragraph 7.4.1 or 7.4.8.

**WARNING**

Power is present inside the UPS cabinet until the upstream input feeder circuit breaker is opened.

### 7.4.28 Using the Remote Emergency Power-off Switch

A UPS emergency power-off is initiated by the REPO pushbutton switch. In an emergency, you can use this switch to control the UPS output. The REPO switch de-energizes the critical load and powers down the UPSs immediately, without asking for verification.

The UPS, including Bypass, remains off until restarted.

**CAUTION**

All power to the critical load is lost when the REPO switch is activated in the following step. You should use this feature only when you want to de-energize the critical load.

***NOTE*** *The following instructions are for the Eaton-supplied REPO switch. If a customer-supplied REPO switch is used, it may not activate in the same manner; refer to the operating instructions provided with the switch.*

To use the REPO switch:

1. Firmly push the red pushbutton until it locks into place. The switch latches into the activated state (see Figure 7-8).

   The input, output, and bypass backfeed contactors open, the battery breaker or disconnect is tripped, and the power module is turned off immediately, without asking for verification on all UPSs.

**CAUTION**

Do not attempt to restart the system after the REPO until the cause of the shutdown has been identified and cleared.

2. To deactivate the REPO switch in preparation for restarting the UPS, insert the supplied key and rotate clockwise until the red pushbutton releases (see Figure 7-8). To remove the key, rotate the key back to the vertical position.

3. Restart the UPSs by following the procedure in paragraph 7.4.1 or 7.4.8.

**WARNING**

Power is present inside the UPS cabinet until the upstream input feeder circuit breaker is opened.

## 7.5 Color Touchscreen Control Panel

This section describes how the various screens are used to control and monitor UPS operation. Figure 7-9 shows the location of the color touchscreen control panel on the front door of the UPS. For a description of the control panel functions, see paragraph 7.6.

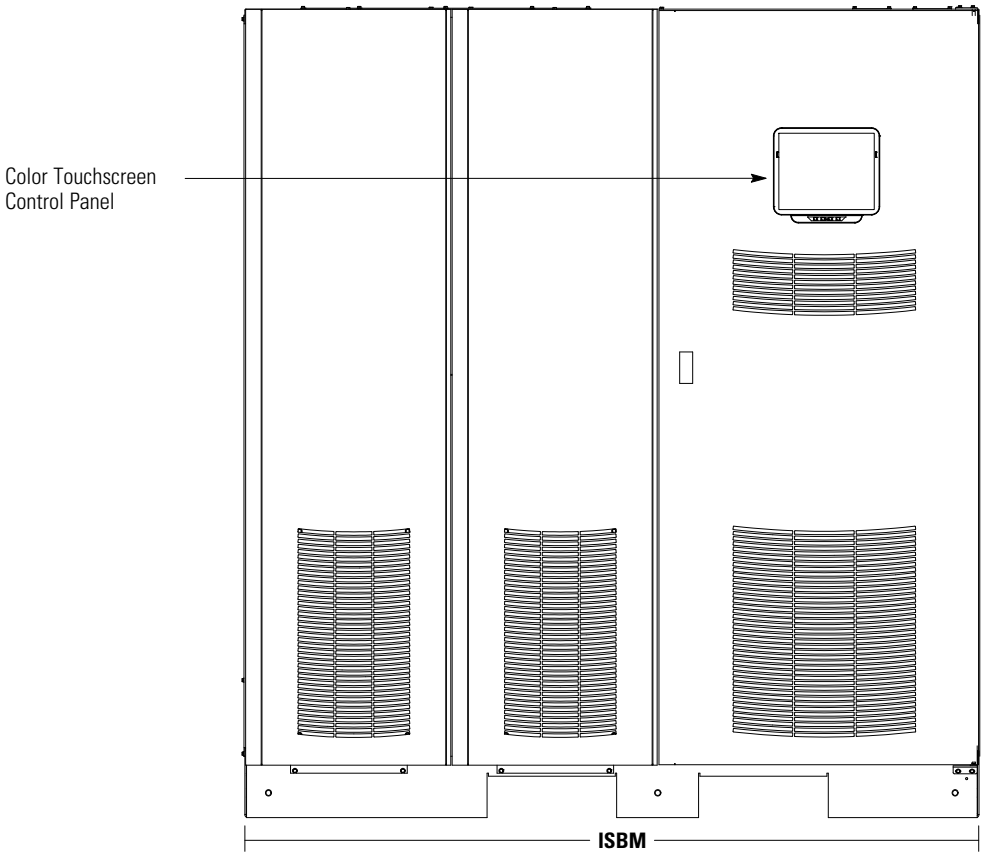


**Figure 7-9. Color Touchscreen Control Panel Location (Typical)**

## 7.6 Using the Color Touchscreen Control Panel

The following sections describe the UPS control panel and how to monitor and control UPS operation.

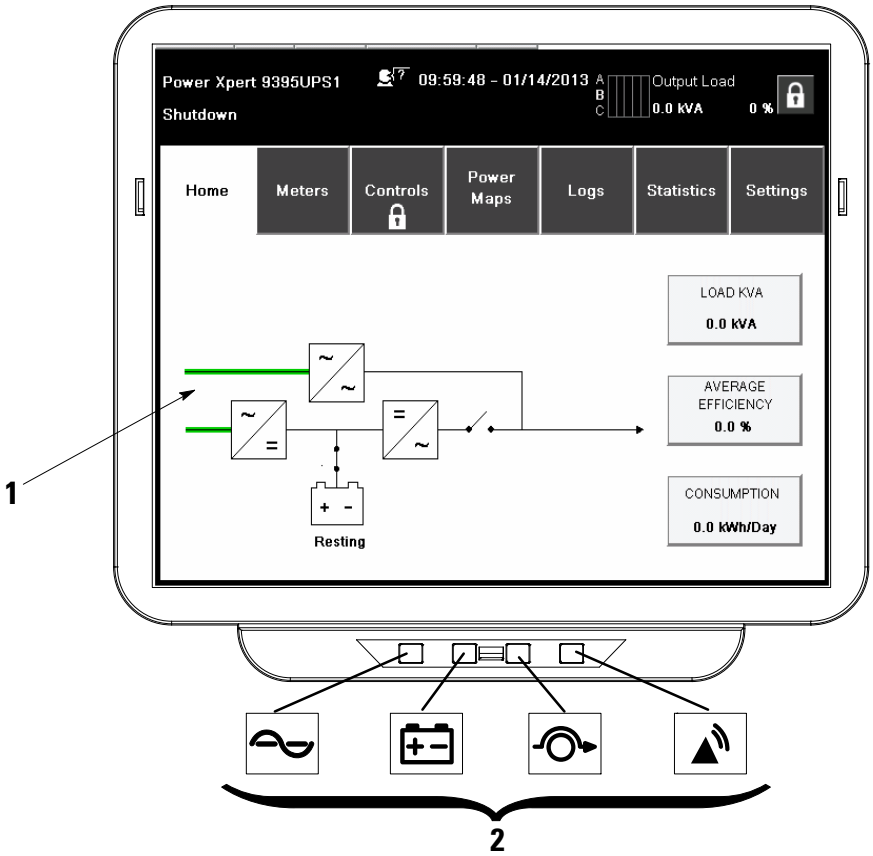


(Symbols enlarged to show detail)

**Figure 7-10. UPS Color Touchscreen Control Panel (Typical)**

The color touchscreen control panel consists of:

- A color liquid crystal touch screen display (**1**)
- A horizontal row of LED indicators (**2**)

Before system power up, the panel displays a system status screen similar to the one shown in Figure 7-10.

When the unit powers up, the screen displays as shown in Figure 7-10. When power is applied to the system, the display advances to the Sign In screen shown in Figure 7-11 .

### 7.6.1 Status Indicators

The symbols on the bottom of the control panel are *status indicators*. These colored light emitting diode (LED) lamps work with the alarm horn to let you know the operating status of the UPS. See Table 7-6.

**Table 7-6. Status Indicators**

| Indicator | Status | Description |
|---|---|---|
| Green | Lit Steady | The UPS is in Online mode, operating normally. The power module is supplying power to the critical load. |
| Yellow | Lit Steady | The UPS is in Battery mode. Because Battery mode is a normal condition of the UPS, the Online indicator also remains illuminated. |
| Yellow | Lit Steady | The UPS is in Bypass mode. The critical load is supported by the bypass source. The Online indicator is not illuminated when the system is in Bypass mode. |
| Red | Lit Steady | The UPS has an active alarm and requires immediate attention. The screen shows the highest priority active alarms. All alarms are accompanied by an audible horn. To silence the horn, press any control panel pushbutton once. The Alarm indicator may be illuminated along with other indicators. |
| | Lit Flashing | There is a new UPS alarm condition. The indicator flashes until acknowledged by pressing anywhere on the control panel once. |

### 7.6.2 Using the Touch Screen

The touch screen control panel provides an operator interface with the UPS system. Figure 7-11 identifies the display areas discussed in the following sections.

Touching anywhere on the screen brings up the Sign In Request pop-up. Touch the X in the upper right corner of the pop-up, then touch the padlock symbol in the upper right corner to obtain the password request pop-up (see Figure 7-12).

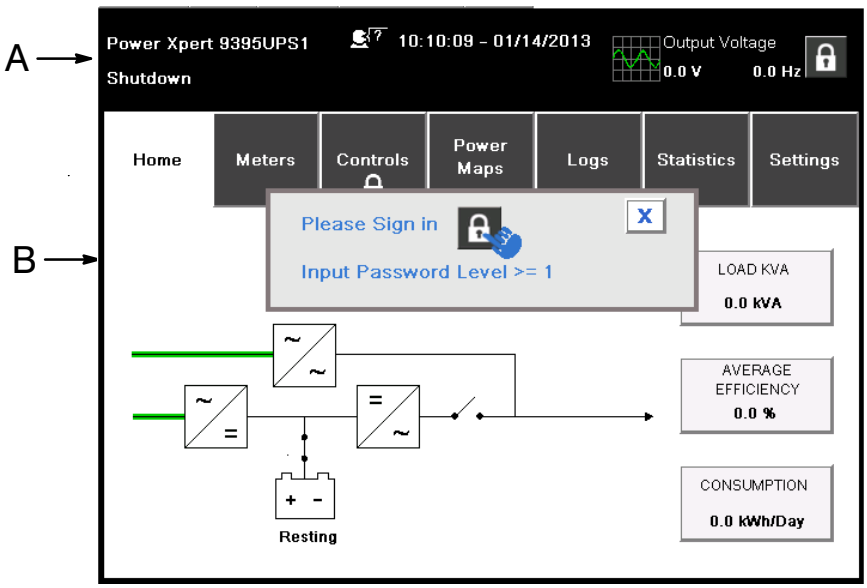


**Figure 7-11. Parts of the Touch Screen**

**E** The *UPS status* area automatically displays the Eaton model number, current time and date, active alarms, active notices, and load percent and battery run time for the UPS. If the Environmental Monitoring Probe is installed, the temperature and humidity sensed by the probe will also be displayed. The small head symbol between the system model and time allows the operator select a different language from an imbedded list.

The top line of the display blinks while scrolling when the system needs attention. Some notices and alarms may be accompanied by an audible horn. To silence the horn, touch anywhere on the control panel once. For more information about alarms and notices, see paragraph 7.6.12.

**F** The *information area* contains data about UPS status and operations.

**G** After touching the padlock in the upper right corner, the numerical keypad appears to allow entry of the system access pass code for operation. See Table 7-7 Security Levels and Functions.

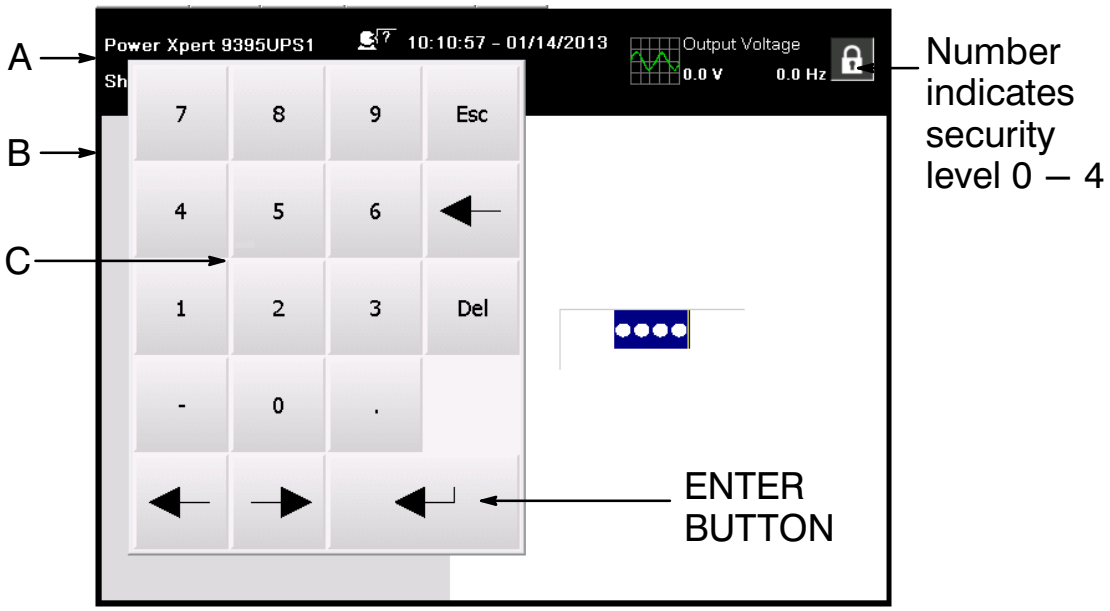


**Figure 7-12. Sign In or Password Request Screen**

**Table 7-7. Security Levels and Functions**

| Level | Name | Passcode | Description |
|---|---|---|---|
| 0 | USER | NONE | USER |
| 1 | CONTROL | 1111 | USER + CONTROL |
| 2 | CONFIGURATION | 0101 | USER + CONTROL + CONFIGURATION |
| 3 | SERVICE | Service Only | USER + CONTROL + CONFIGURATION + SERVICE |

### 7.6.3 Using the Main Menu Buttons

The UPS menu bar shown in Figure 7-13 allows you to display data in the information area to help you monitor and control UPS operation. Table 7-8 shows the basic menu structure.

**Table 7-8. Display Function Menu Map**

| Menu Option | Description |
|---|---|
| HOME | Displays the system status both graphically and within the info bar. |
| METERS | Displays performance meters for the system or critical load. |
| CONTROLS | Allows access to various system performance control screens. |
| POWER MAPS | Allows operator to observe system power flow. |
| LOGS | Allows access to system information logs. |
| STATISTICS | Allows access to see system specific operation values. |
| SETTINGS | Allows access to various screen controlled variables for system operation. Level 0, 1 and 2 are for user/operator. Level 3 is used only by service personnel. |

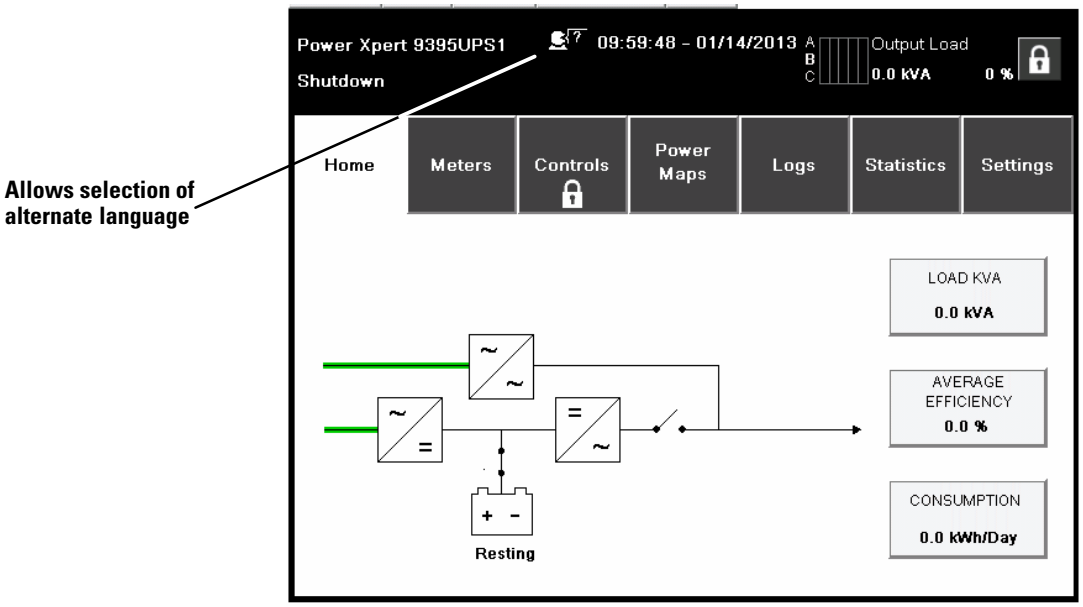


**Figure 7-13. Home Screen**

***NOTE*** *On all screens, Black lines indicate NO power flow, Green lines indicate ACTIVE power flow, Yellow lines indicates an out-of-tolerance condition.*

***NOTE*** *Screens shown are representative examples of system operation. The screen data will vary based on system activity at the time of observation.*

### 7.6.4 Power Maps Screen (Online Mode)

Figure 7-14 shows the Main Menu and Power Maps screen. The Power Maps screen displays immediately after entering the access code.

The Power Maps screen shows a real-time graphical representation of the operating status.

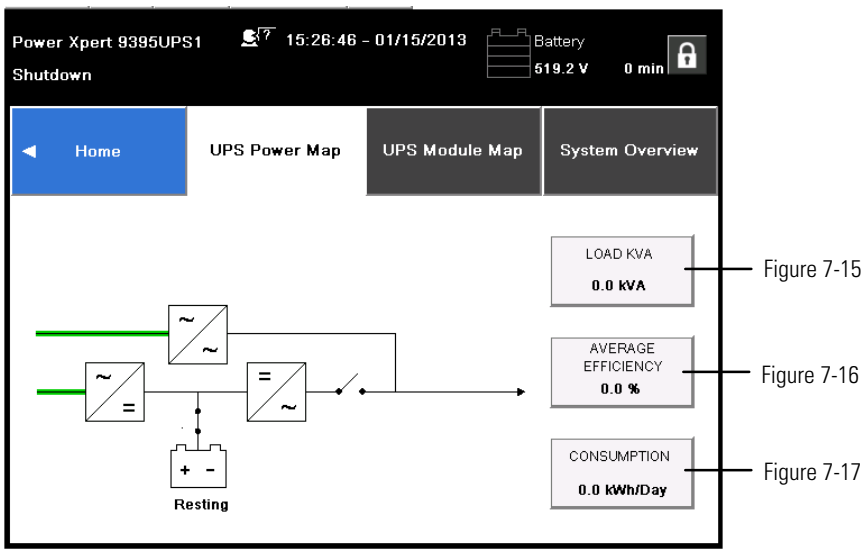


**Figure 7-14. Main Menu and Power Maps Screen (Online Mode)**

Touching the LOAD kVA button displays the Output kVA screen shown in Figure 7-15

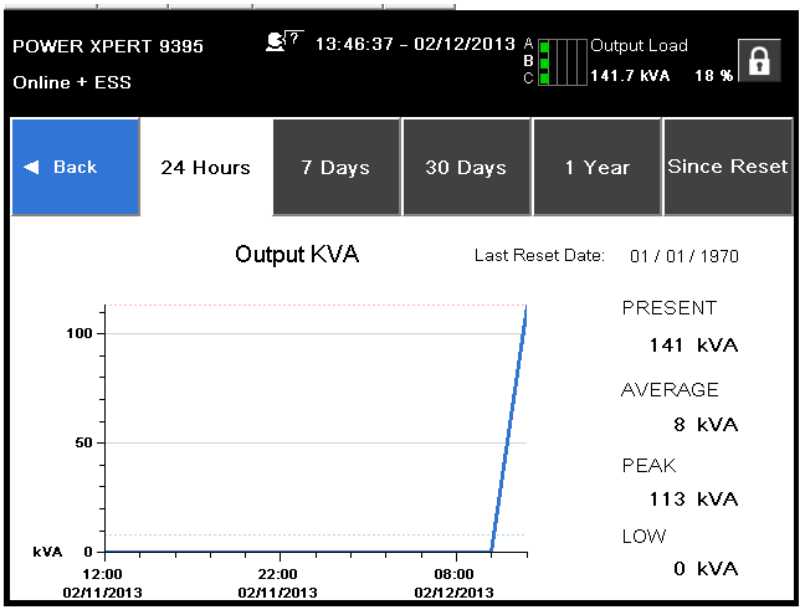


**Figure 7-15. Output kVA Screen from Home Screen**

Touching the AVERAGE EFFICIENCY button displays the system efficiency screen shown in Figure 7-16.

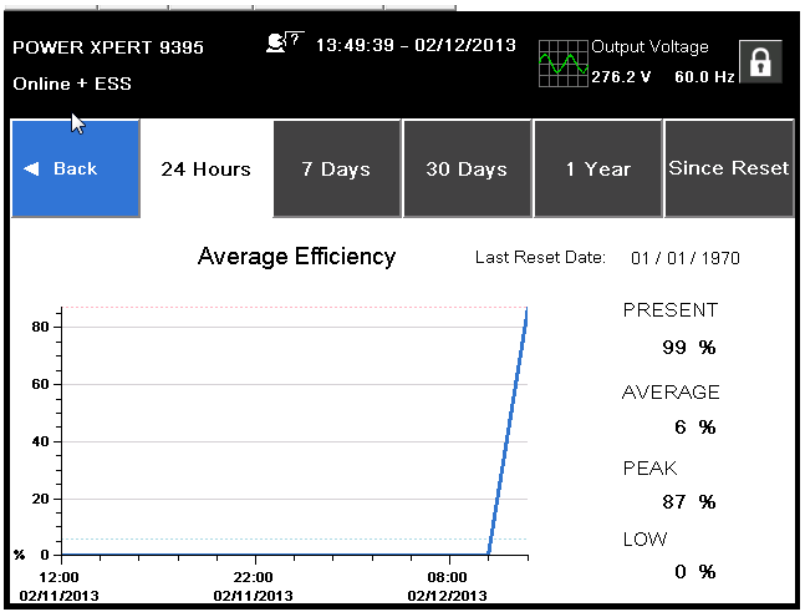


**Figure 7-16. Average Efficiency Screen from Home Screen**

Touching the CONSUMPTION button displays the screen shown in Figure 7-17.

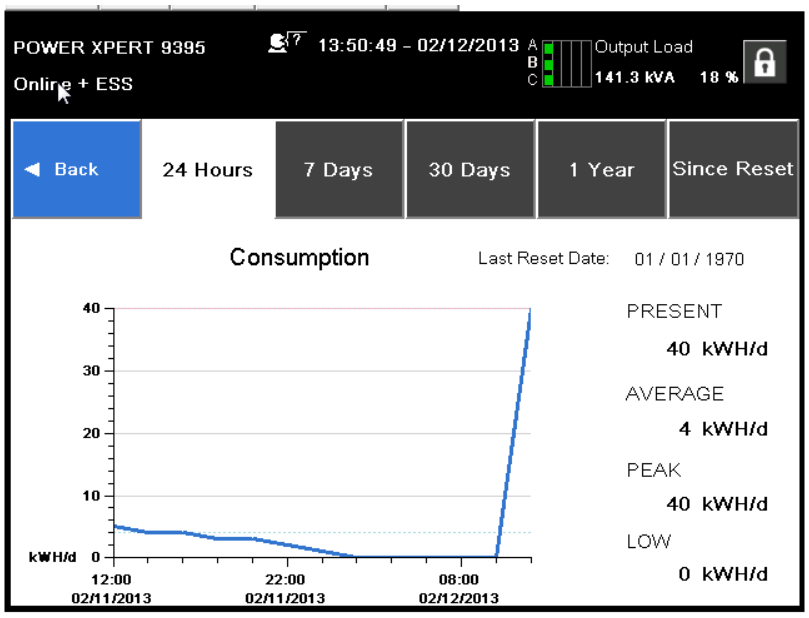


**Figure 7-17. Consumption Screen from Home Screen**

### 7.6.5 Power Maps Screen (Bypass Mode)

Figure 7-18 shows the Bypass screen. The Bypass screen displays only when the system is in Bypass mode.

The Bypass screen shows a real-time graphical representation of the operating status.

Touching any of the buttons on the right side of the screen takes the user directly to that information screen

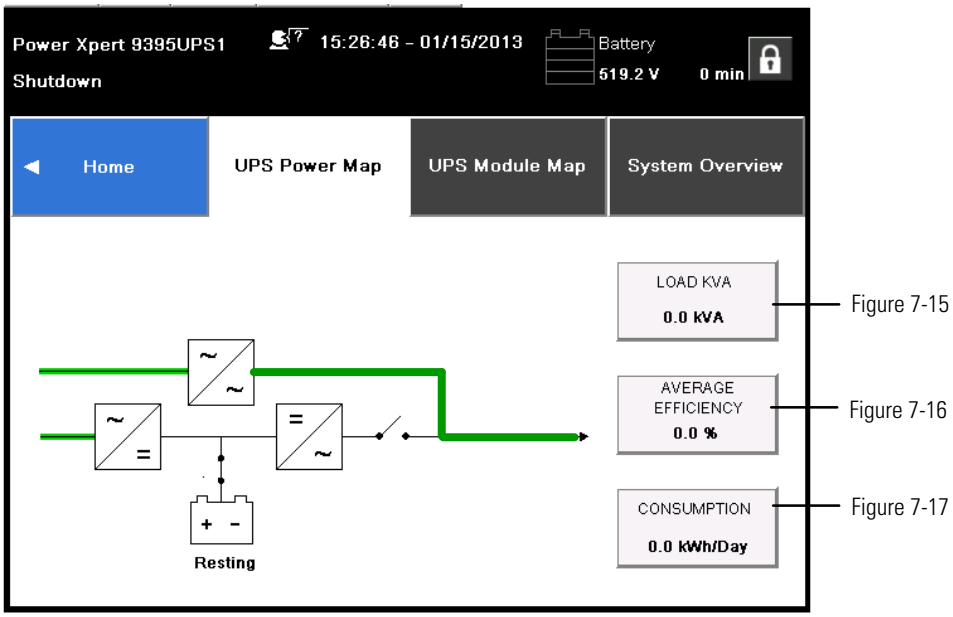


**Figure 7-18. Bypass Screen**

### 7.6.6 Command Confirmation Pop-Up

Figure 7-19 is an example of a command request confirmation pop-up screen. This type of pop-up allows the user to confirm that the requested command is valid.

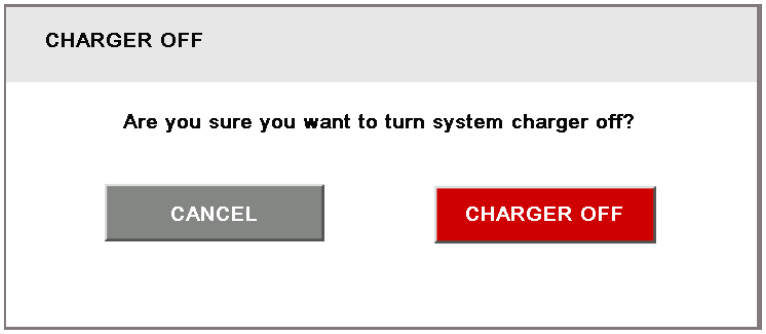


**Figure 7-19. Typical Command Confirmation Screen (Charger Off)**

### 7.6.7 Meters Summary Screen

Figure 7-20 shows the Meters Summary screen. This screen allows selection of the various metering readout functions of Input, Output and overall System status.

The three left items in the OVERVIEW section of the screen are not active buttons but are status detail panels. They show individual conditions of the UPS at that time.

The two items at the far right of the OVERVIEW section are active buttons. They can be selected to show a profile of efficiency or consumption over various time periods of 24 hours, 7 days, 30 days, or 1 year. This is true of all the meters screens listed in the top section.

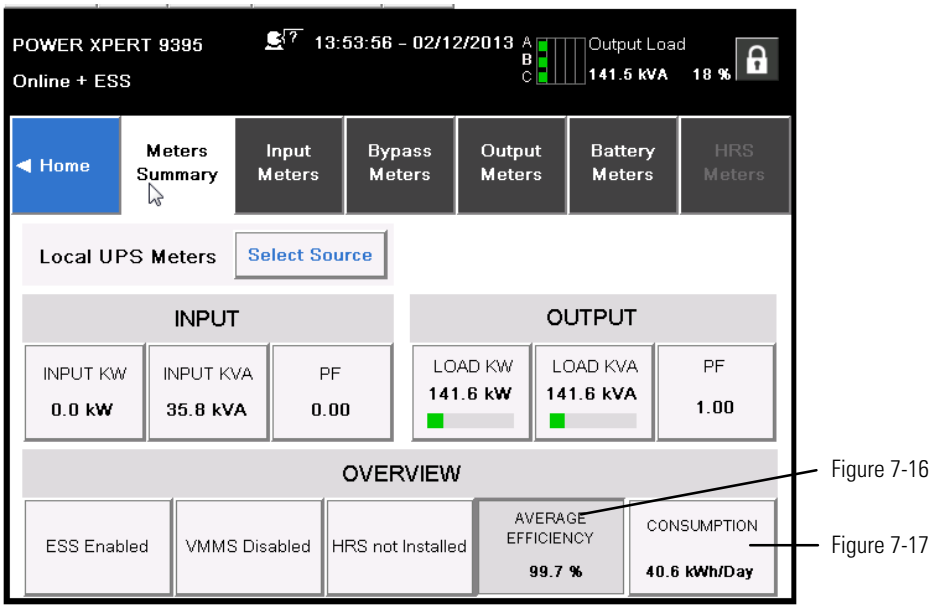


**Figure 7-20. Meters Summary Screen**

### 7.6.8 Input Meters Screen

Figure 7-21 shows the Input Meters screen. This screen displays the individual phase and total power values of the system.

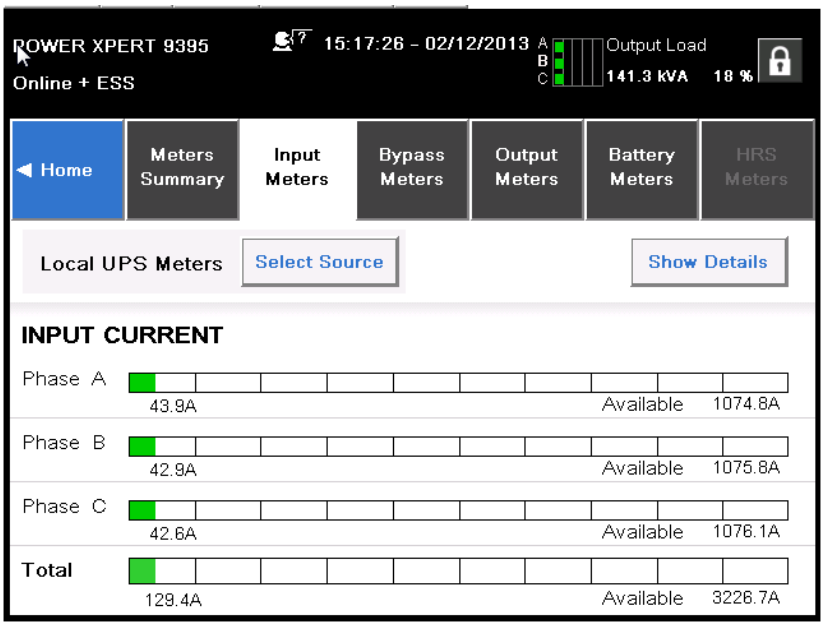


**Figure 7-21. Input Meters Screen**

The Bypass Meters Screen shown in Figure 7-22 displays values pertaining to the Bypass conditions.

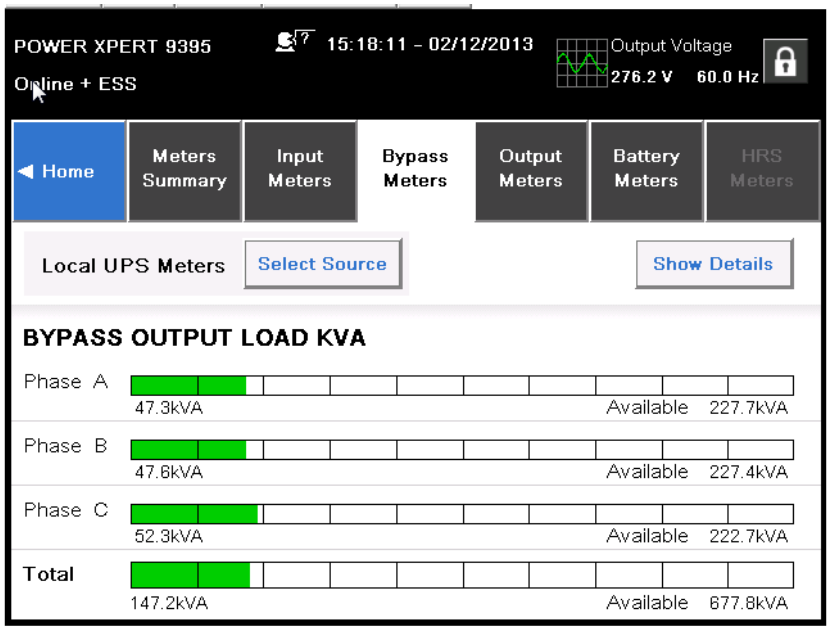


**Figure 7-22. Bypass Meters Screen**

The Output Meters Screen shown in Figure 7-23 displays values pertaining to the system output.

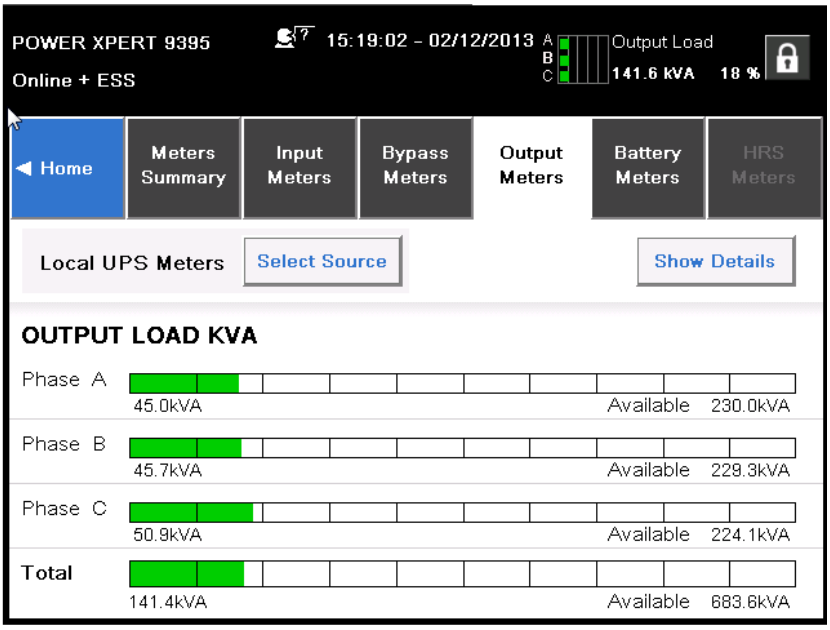


**Figure 7-23. Output Meters Screen**

### 7.6.9 Input Meters Detail Screen

Figure 7-24 shows the Input Meters detail screen. This screen displays the individual values of the system in additional detail.

The Bypass, Output, and Battery meters screens display similar values relevant to their monitoring of the system.

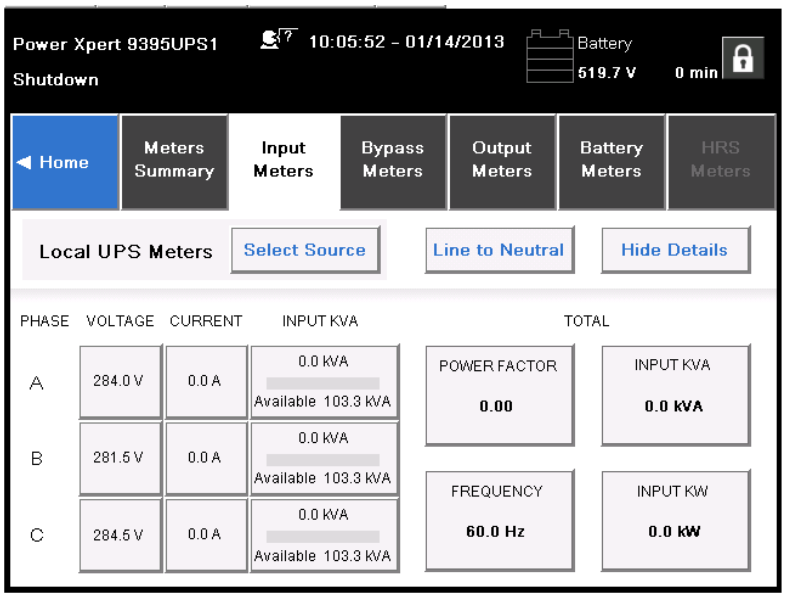


**Figure 7-24. Input Meters Detail Screen**

The Select Source screen shown in Figure 7-25 allows the operator to choose the individual source for system readings.

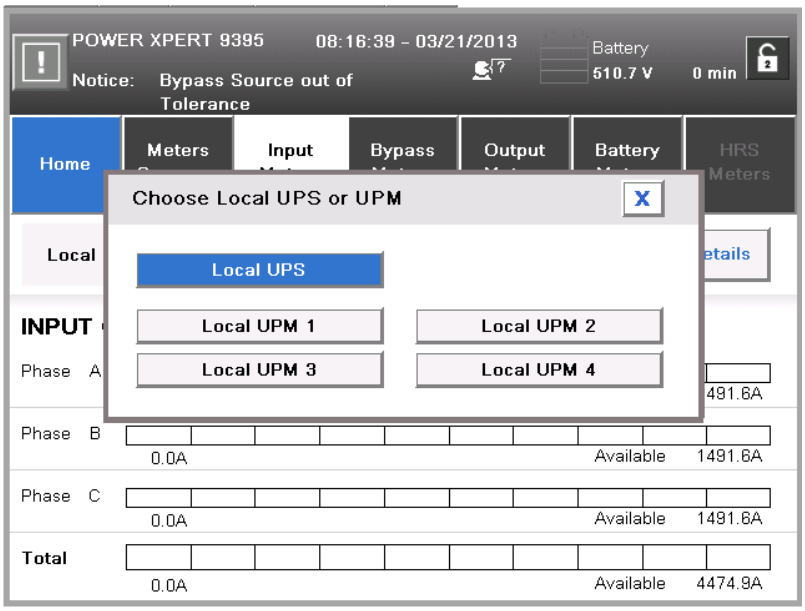


**Figure 7-25. Select Source Screen**

### 7.6.10 Battery Meters Screens

Figure 7-26 shows the Battery Meters basic screen.

Figure 7-27 shows the Battery Log access screen.

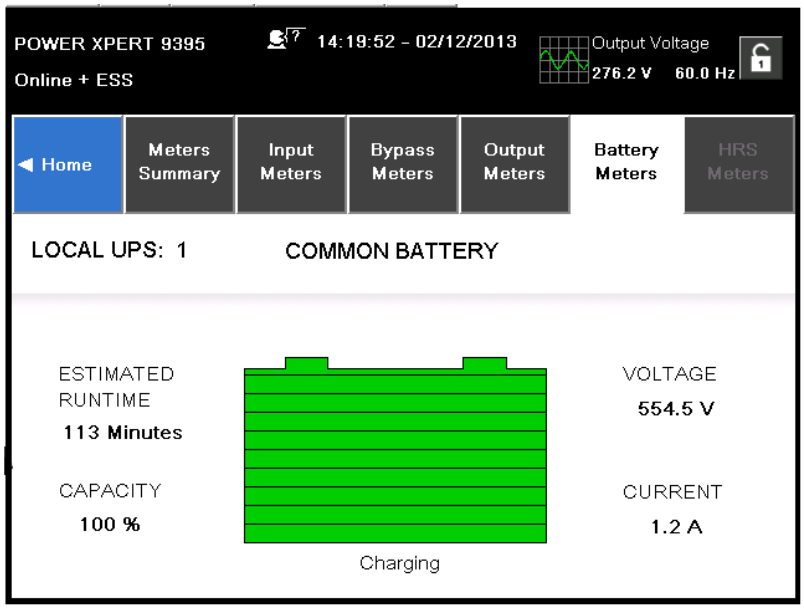


**Figure 7-26. Battery Meters Screen**

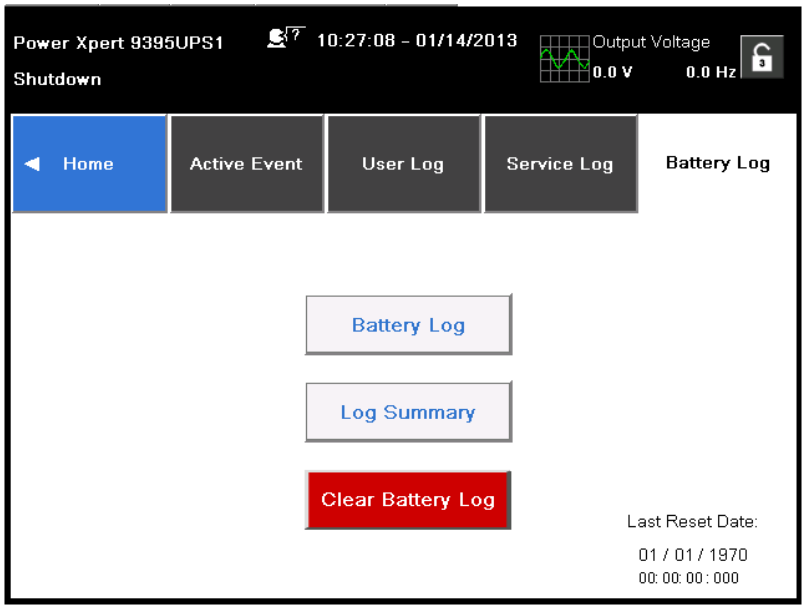


**Figure 7-27. Battery Log Screen**

Figure 7-28 shows the Battery Log Detail screen.

Figure 7-29 shows the Battery Log Summary screen.

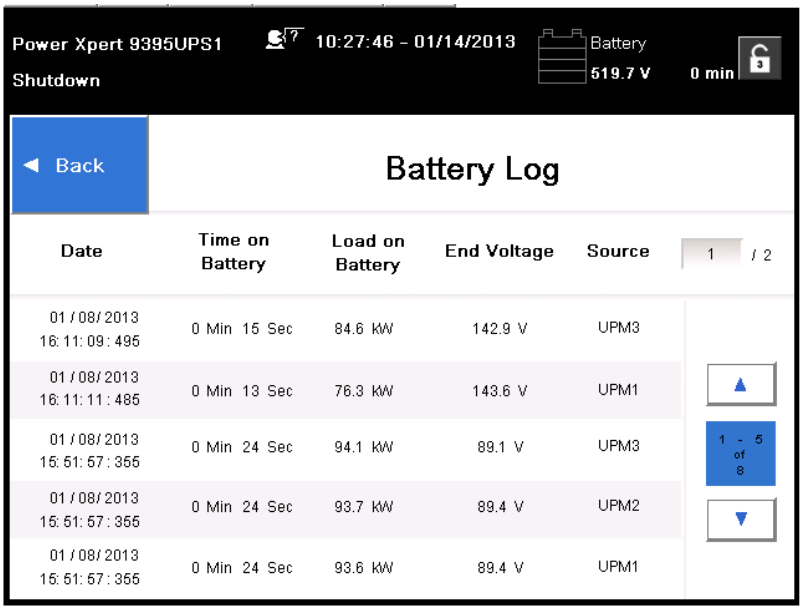


**Figure 7-28. Battery Log Detail**

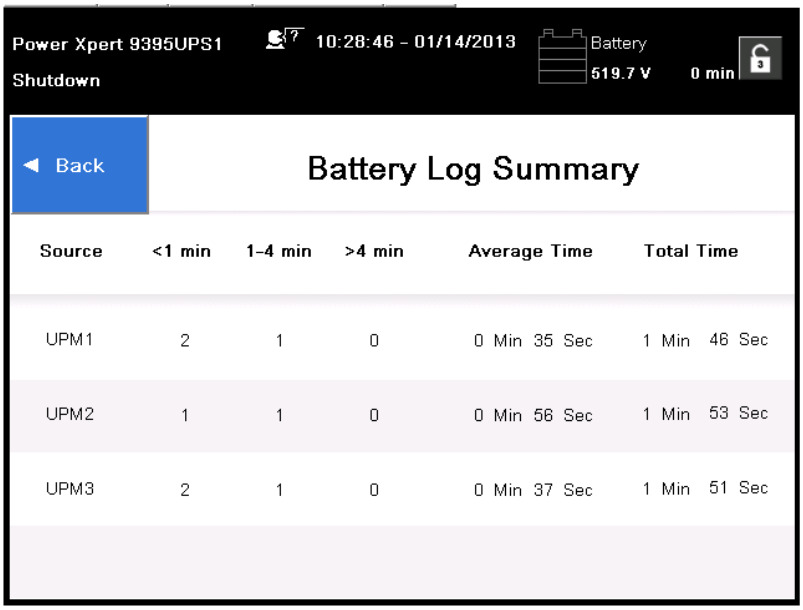


**Figure 7-29. Battery Log Summary Screen**

### 7.6.11 System Events Main Screen

When the UPS system is running in Online mode, it continually monitors itself and the incoming utility power. In Battery or Bypass modes, the UPS may issue alarms to display exactly what event caused the change from Online mode. System events on the UPS can be indicated by horns, lights, messages, or all three. See Figure 7-30.

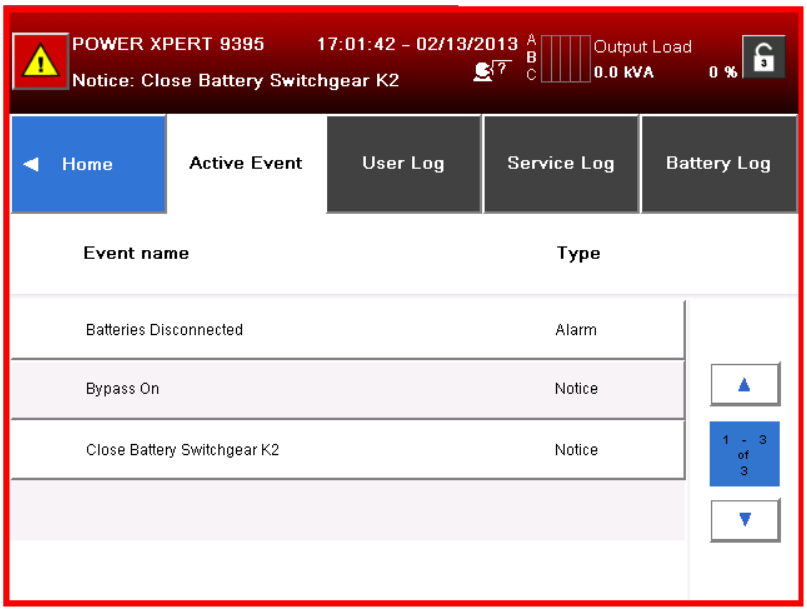


**Figure 7-30. System Events Screen**

### 7.6.12 User Log

Select **LOGS** from the menu bar on the main menu screen to look at the active events screen. This screen shows any currently active alarms, notices, or commands.

- **System Event Horns** – The system event horn beeps to alert an operator that an event needing attention is taking place. The horn cycles at a half-second rate.
- **System Event Indicators** – The status indicators on the UPS control panel work with the event horn to let the operator know when the UPS is operating in any mode other than normal. Only the ON indicator is visible during normal UPS system operation. The other indicators illuminate to indicate alarms or events. When an alarm occurs, first check these indicators to see what type of event has taken place. For descriptions of the status indicators, see paragraph 7.2.1.
- **System Event Messages** – When a system event occurs, a message appears on the LCD in the UPS status area. This message is also written to the Active Events Log and may be added to the History Log. The messages are divided into four categories: alarms, notices, status, and commands.

The user log window (**1**) allows the operator to enter any number up to the number shown to the right of the box. Each window shows five events. The operator can also use the UP/DOWN arrows above and below the blue field (**2**) showing the number of events in the log. See Figure 7-31.

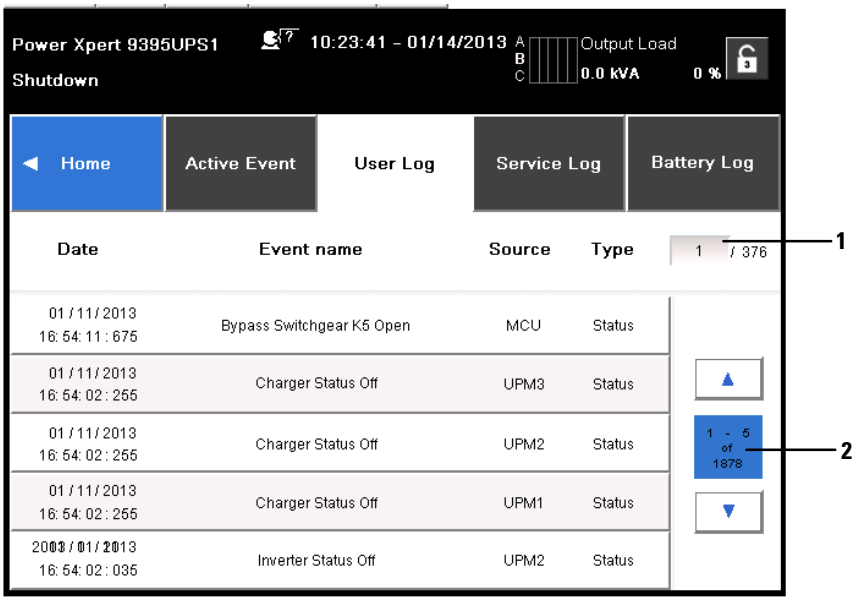


**Figure 7-31. User Log Screen**

Selecting an event opens the Event Detail screen shown in Figure 7-32. This screen details the specifics of the event for the user to see.

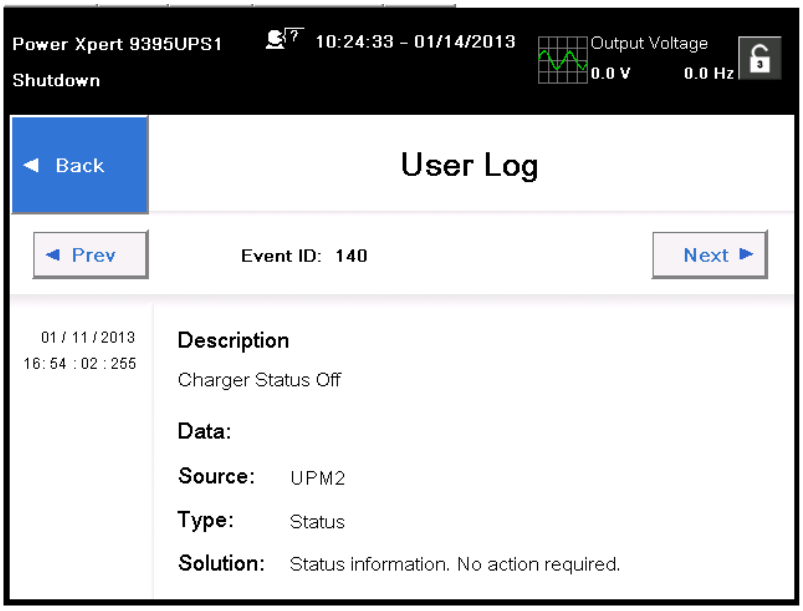


**Figure 7-32. User Log Detail Screen**

### 7.6.13 System Status Screen and Controls

Press the SYSTEM CONTROLS pushbutton on the main menu bar to display the System Status screen. Online operation, transfer to bypass, UPM start up and shutdown, and LOAD OFF commands are controlled through this screen. In addition, the screen displays the current status of the UPS, indicates whether the UPS is in Maintenance Bypass or Bypass, and displays the state of the UPM. Figure 7-33 shows the System Status screen.

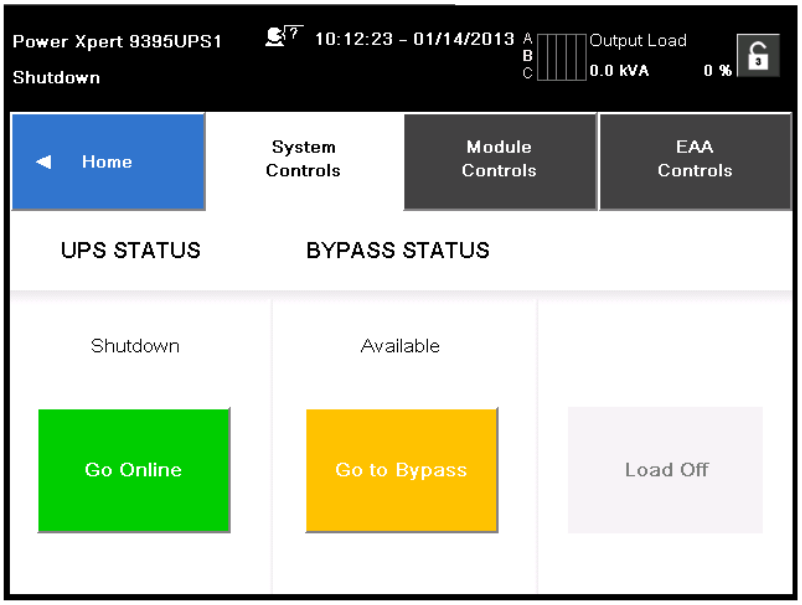


**Figure 7-33. System Status Screen**

Figure 7-34 shows the Module Controls screen. This screen allows control of the individual modules within the system. It also gives their values and status.

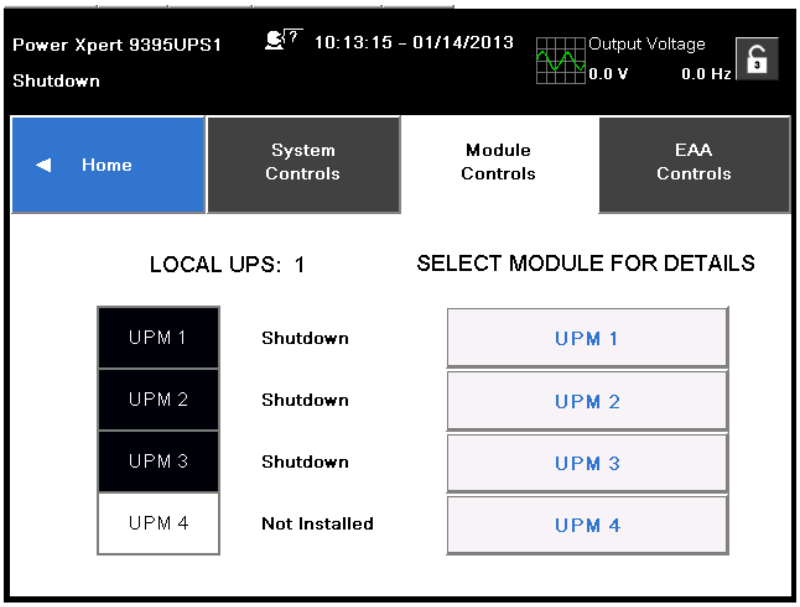


**Figure 7-34. Module Controls Screen**

Figure 7-35 shows the Module Control Detail screen. By selecting any of the modules shown on the previous screen (Figure 7-34), the user can observe full details of an individual module. It also allows the user to move through various modules and modes while within this screen.

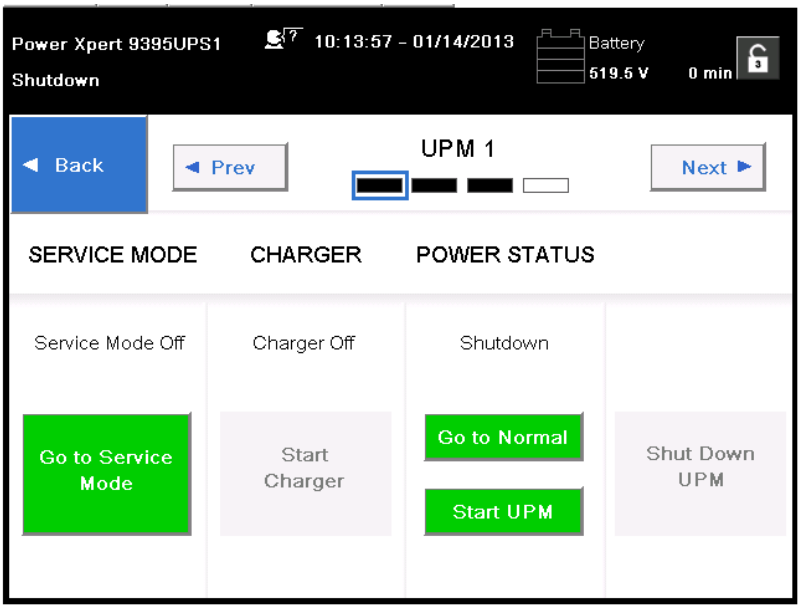


**Figure 7-35. Module Control Detail Screen**

The Metering Method screen allows the operator to select line-to-line or line-to-neutral monitoring values. See Figure 7-36 or Figure 7-37.

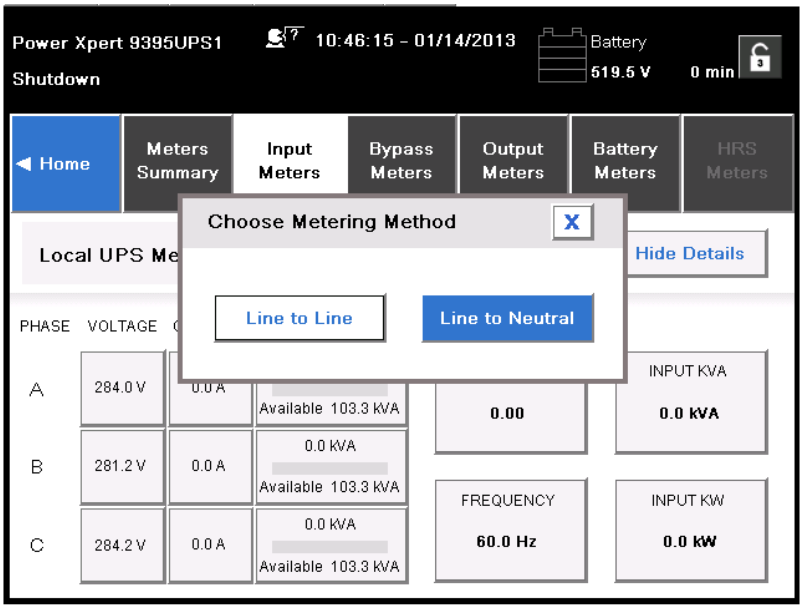


**Figure 7-36. Online Mode Metering Method Option Screen**

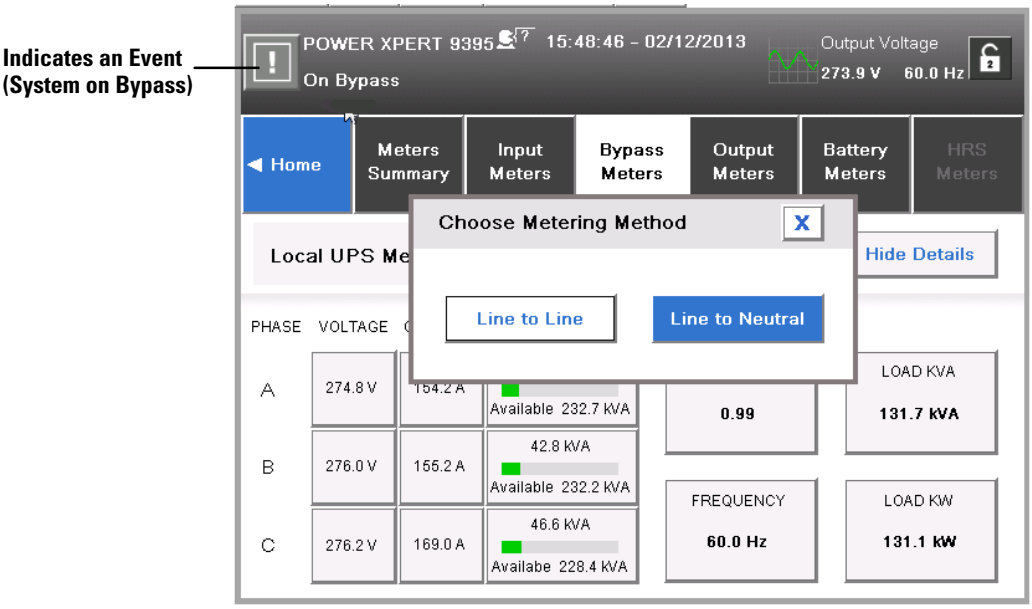


**Figure 7-37. Bypass Mode Metering Method Option Screen**

## 7.6.14 Settings Screen

The screen shown in Figure 7-38 gives the operator access to basic system information such as serial number, installed firmware version, etc. Touching the CLEAN SCREEN button disables the screen for 30 seconds to allow the user to safely clean the screen without affecting operation.

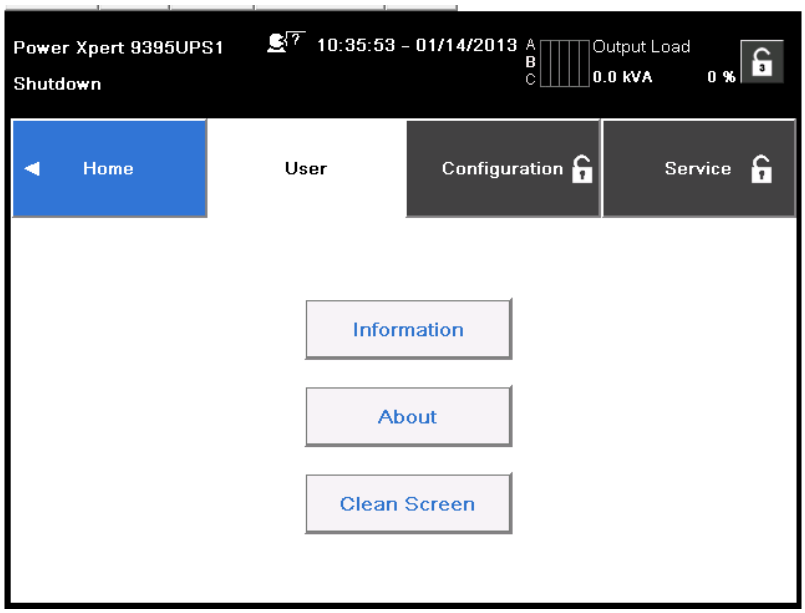


**Figure 7-38. Settings Screen**

### 7.6.15 Configuration Options Screen

The screen shown in Figure 7-39 allows the operator to affect changes to various system values.

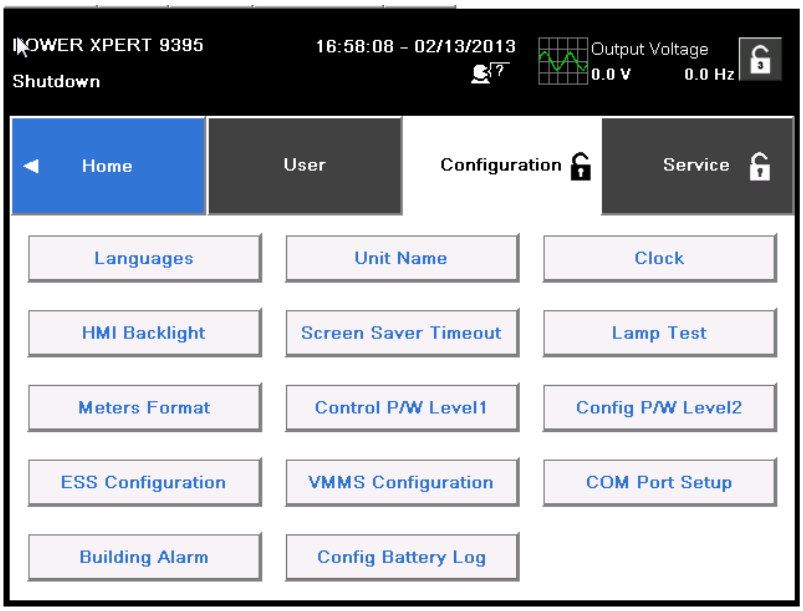


**Figure 7-39. Configuration Options Screen**

### 7.6.16 Energy Advantage Architecture (EAA) Screen

This screen shown in Figure 7-40 allows the operator to activate the various energy saving and power efficiency modes of the system.

The various Energy Advantage Architecture operations are described in the UPS Installation and Operation manual for your system.

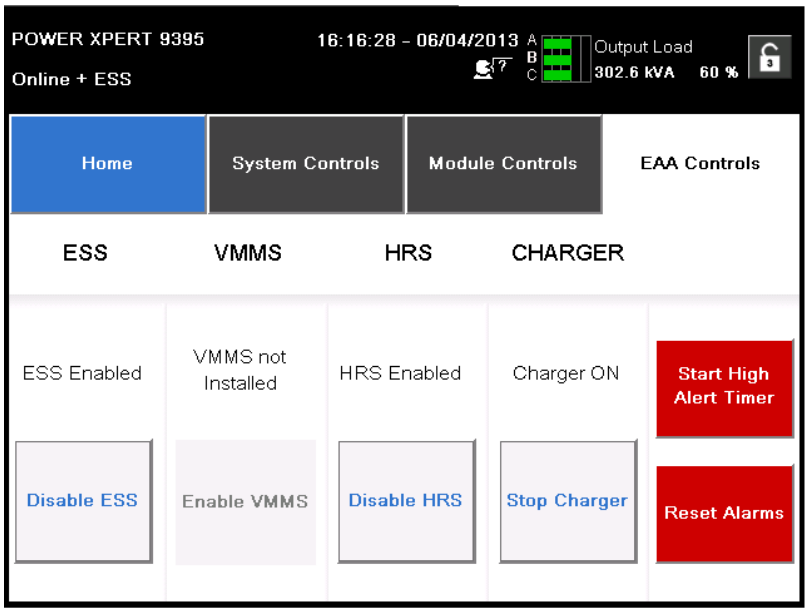


**Figure 7-40. Energy Advantage Architecture (EAA) Screen**

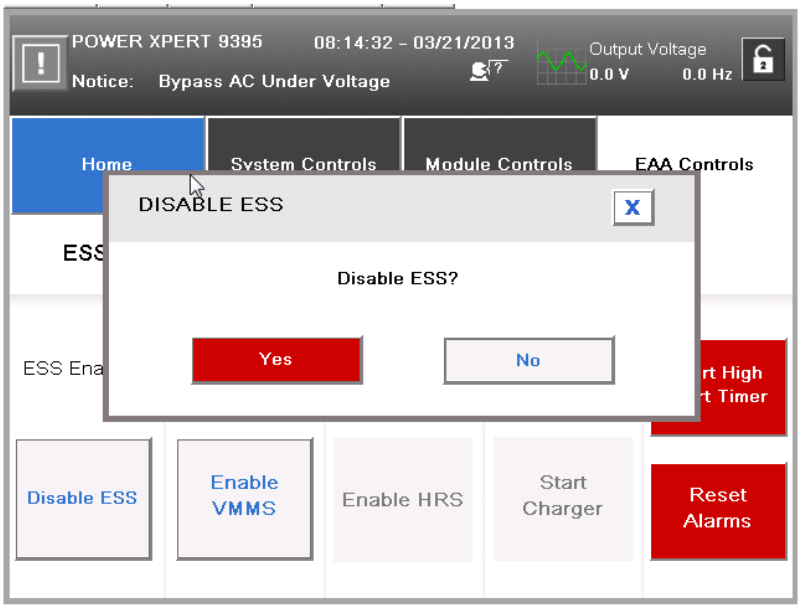


**Figure 7-41. Disable ESS Screen**

This screen shown in Figure 7-41 asks the operator to verify disabling the ESS mode running at that time.

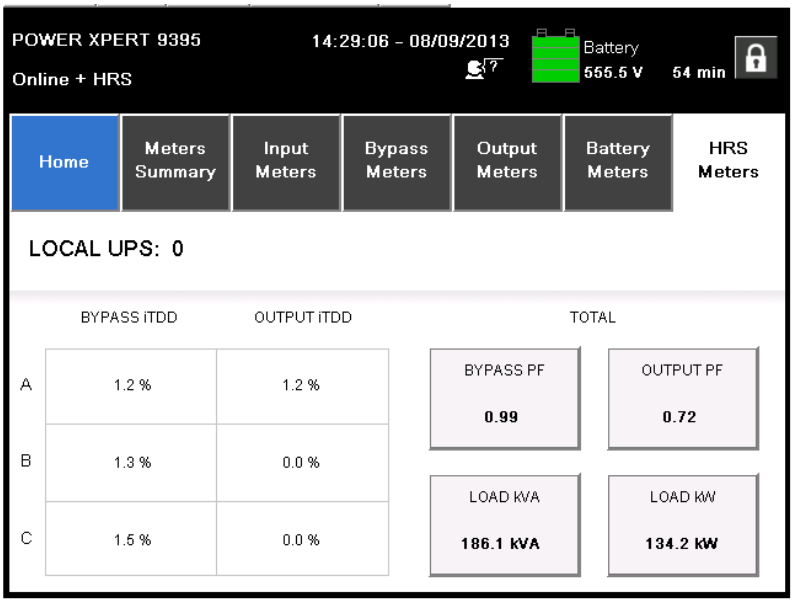


**Figure 7-42. HRS Metering Screen**

The screen shown in Figure 7-42 shows the HRS metering values.

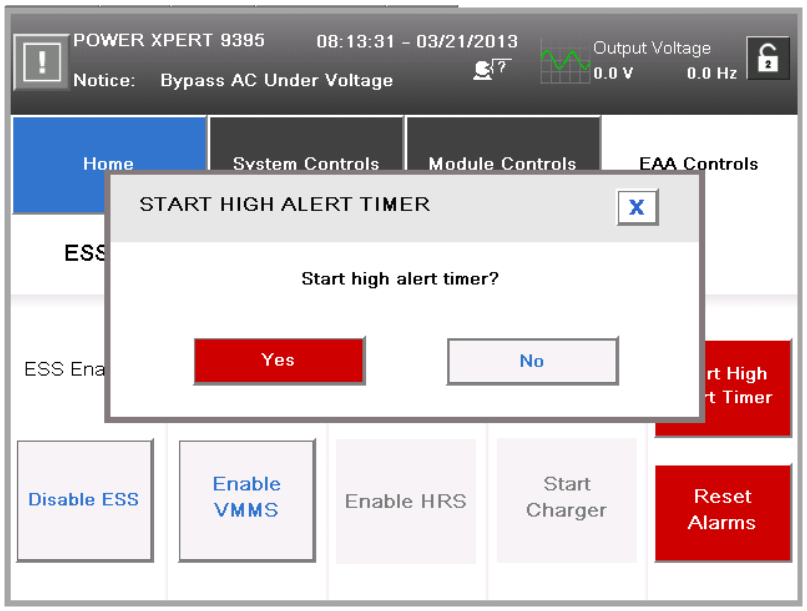


**Figure 7-43. High Alert Timer Screen**

This screen shown in Figure 7-43 asks the operator if they want to start the High Alert mode timer.

## 7.6.17 Statistics Basic Screen

The screen shown in Figure 7-44 allows the operator to query the system for various operational statistics such as shown in Figure 7-45.

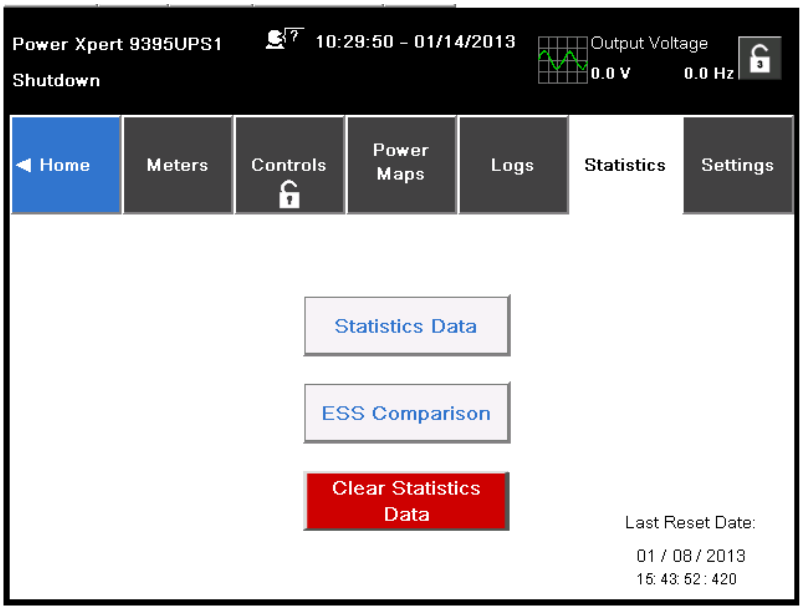


**Figure 7-44. Statistics Basic Screen**

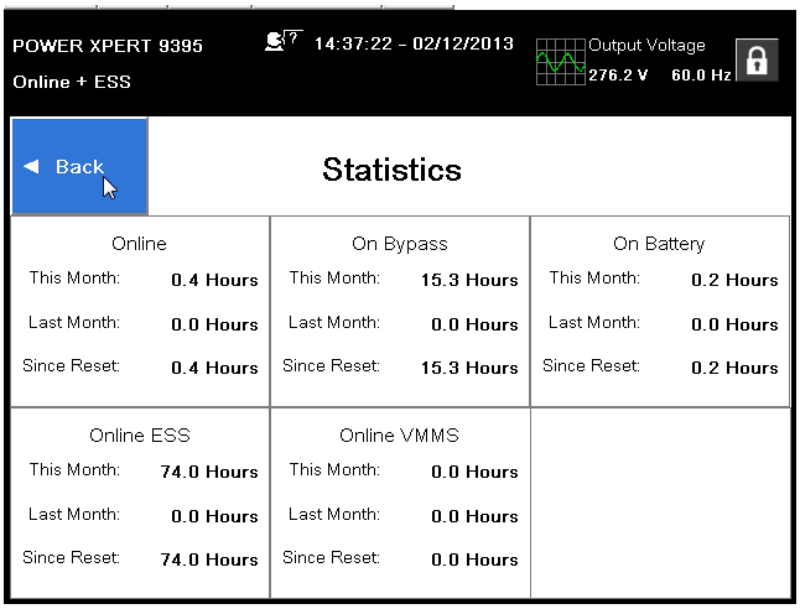


**Figure 7-45. Statistics Data Detail Screen**

## 7.6.18 ESS Comparison Screen

The screen shown Figure 7-46 allows the operator to visually obtain EAA mode efficiency values.

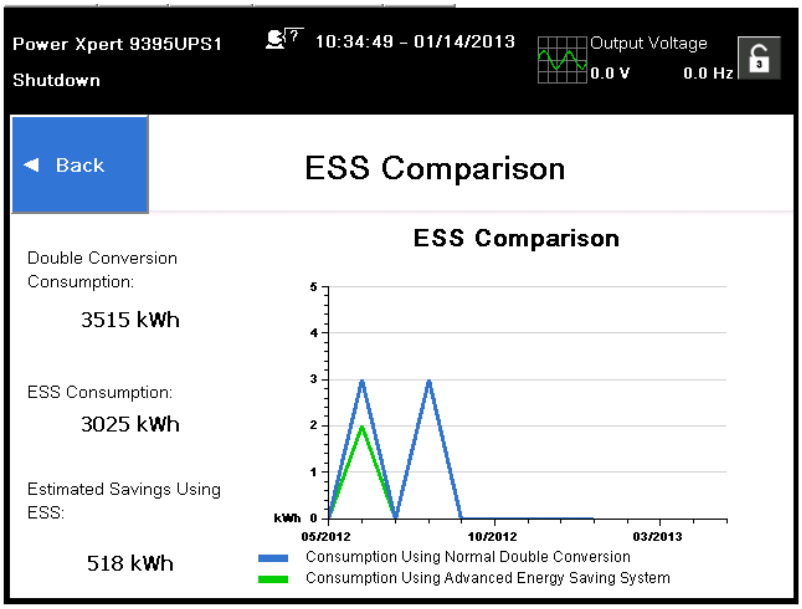


**Figure 7-46. ESS Comparison Screen**

### 7.6.19 UPS Module Map Screen

The screen shown Figure 7-47 allows the operator to control the individual UPMs.

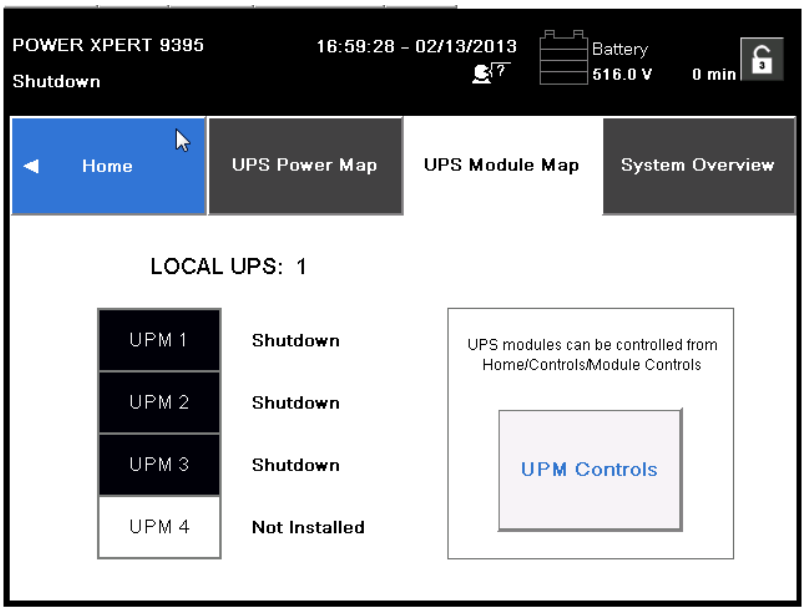


**Figure 7-47. UPS Module Map Screen**

### 7.6.20 System Overview Screen

The screen shown Figure 7-48 displays values for all UPS and UPM parameters.

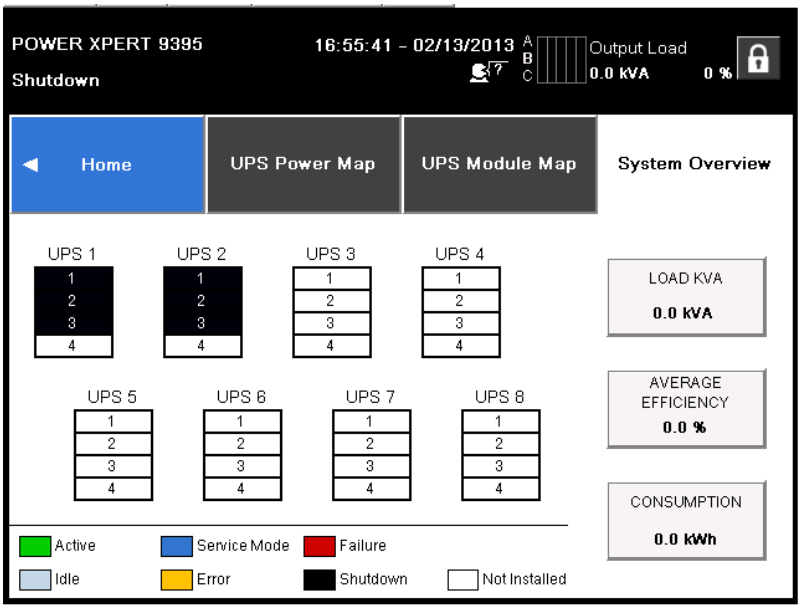


**Figure 7-48. System Overview Screen**

## 7.7 UPS Operation using the Color Touchscreen Control Panel

***NOTE*** *The Energy Saver System mode commands are displayed only if installed at the factory or by an Eaton Customer Service Engineer.*

***NOTE*** *The Variable Module Management System and Energy Saver System modes are mutually exclusive. If the Variable Module Management System mode is enabled, the Energy Saver System mode commands will not be displayed.*

***NOTE*** *If the touch screen fails to respond, open the front door and depress the RESET button located on the bottom of the screen mounting assembly. The screen will reboot but NOT affect system status or operation.*

### 7.7.1 Starting the UPS in Online Mode

To start the UPS system:

1. Unfasten the front door latch and swing the door open (refer to 9395 UPS Operation and Installation manual supplied with system).
2. If the UPS contains input breaker CB1, verify that input breaker CB1 is open.
3. Close the UPS input feeder circuit breaker.
4. Close the UPS Bypass input feeder circuit breaker.
5. If the UPS contains input breaker CB1, close input breaker CB1.
6. Close the door and secure the latch.
7. Observe the UPS control panel display becoming active, indicating logic power.
8. Press the **LOCK** icon on the main screen. The Sign In screen is displayed. Use operator password to log in (factory default password is **0101**).
9. On the System screen, verify the UPS status is **OK** and the UPM status is **OFFLINE**.
10. Close the battery breaker.
11. Verify no alarms are active on the **EVENTS LOG** screen.
12. On the System Status screen, select the **UPS CONTROLS** command.
13. On the UPS Control Command screen, select **GO ONLINE**.

    If Auto Bypass is enabled (factory default), the critical load is immediately supplied by the bypass source, in Bypass mode, until the inverter turns on and the UPS transfers to Online mode. The status indicator on the UPS control panel indicates the UPS is in Bypass mode. If Auto Bypass is not enabled, the UPS output remains off until the UPS transfers to Online mode.

**14.** The **UPS START UP** screen appears

The rectifier and inverter turn on. The inverter continues to ramp up to full voltage.

When the inverter reaches full voltage, the UPS output contactor K3 closes and the static switch turns off. Power is now supplied to the critical load in Online mode. It takes approximately one minute for the UPS to achieve Online mode.

The Online status indicator is illuminated. The UPS status indicates **ONLINE** on the header section of the screen. The UPM status indicates **ONLINE, CHARGING** on the MIMIC Screen.

To activate or enable/disable any of the UPS operational modes, follow the online screen prompts.

To obtain any system information, follow the on screen prompts to get to the proper screen. The operator cannot inadvertently cause a system dump or disconnect unless they override a warning pop-up. Value or information screens DO NOT affect system operation.

This page intentionally left blank.

# Chapter 8 Communication

This chapter describes the communication features of the Power Xpert 9395 UPS and provides information about connecting hardware. For terminal wiring information, see paragraph 3.2.4 on page 3-17 and paragraph 4.7. For location of the customer interface panels and terminals, see Figure 4-4 and Figure 4-12 through Figure 4-15.

## 8.1 X-Slot Cards

The Power Xpert 9395 UPS has four standard, factory-installed X-Slot communication bays. See Figure 4-12 for bay locations. The UPS is compatible with the following X-Slot cards (see Figure 8-1):

- Power Xpert® Gateway Card – provides a data gateway from the UPS to the Power Xpert software; provides remote monitoring through a Web browser interface, e-mail, and a network management system using SNMP; connects to a twisted-pair Ethernet (10/100BaseT) network. Modbus TCP support provides direct integration of the UPS parameters to a Building Management System (BMS). It has a built-in switching hub that allows one additional network device to be connected to the network without the requirement of an additional network drop.
- Modbus Card – provides direct integration of UPS information (meters and status) to a Building Management System (BMS) using the Modbus RTU protocol.
- Relay Interface Card (AS/400) – has isolated dry contact (Form-C) relay outputs for UPS status: Utility failure, Low battery, UPS alarm/OK, or On bypass when interfacing with IBM AS/400 computers, other relay connected computers, and industrial applications.
- Industrial Relay Card (IRC) – indicates the operating status of the UPS system using the customer's monitoring equipment. The IRC uses four isolated normally-open or normally-closed dry relay contacts to indicate the UPS status. Online, Bypass, Battery, and Alarm modes can be monitored.
- Powerware Hot Sync CAN Bridge Card – provides connectivity for operational mode control and metering of a parallel system at any UPM in the system. In addition, this card can be used to connect optional system monitoring devices, such as a Remote Monitor Panel II (RMP II), a Relay Interface Module II (RIM II), or a Supervisory Contact Module II (SCM II) to the UPS.

LAN drops for use with X-Slot connectivity cards must be provided by facility planners or the customer.

For installation and setup of an X-Slot card, contact an Eaton service representative (see page -10). Refer to the manual supplied with the X-Slot card for user instructions.

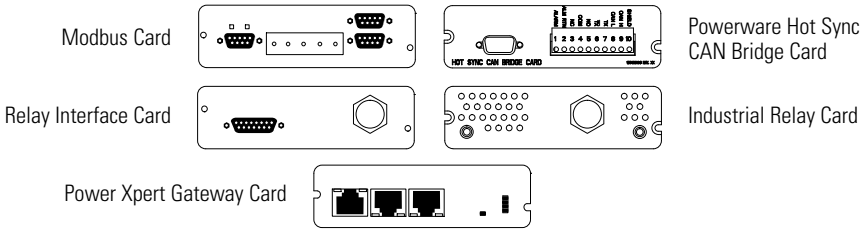


**Figure 8-1. Optional X-Slot Cards**

## 8.2 eNotify Service

The Power Xpert 9395 UPS supports Eaton's eNotify Service. eNotify Service is included at no charge during the first year of operation (warranty period), and also with the purchase of a specific Eaton Support Agreement after the initial warranty expires. eNotify and support agreement availability or specific features may vary by market; for more information, refer to: www.eaton.com/enotify/.

### 8.2.1 eNotify Service Features

The eNotify Service provides proactive monitoring and a monthly report detailing the ongoing health of your Power Xpert 9395 UPS:

- Proactive monitoring, called Anomaly Detection, automatically analyzes the status of the Power Xpert 9395 UPS on a daily basis. All data gathered from the unit, current and historical, is analyzed at the Customer Reliability Center (CRC) for trending issues. A set of factors, or rules, compared against your UPS's data can indicate a potential impending failure and trigger an appropriate anomaly notification to a CRC Analyst. Critical events are checked for additional anomalies. Through this service, the CRC can take pre-emptive, corrective action to ensure the highest level of availability of your Power Xpert 9395 UPS.
- The Customer Monitoring Report delivers information about Eaton's analysis of your Power Xpert 9395 UPS on a monthly basis. Depending on the model, the report provides detailed information about voltages, loads, external factors such as temperature and humidity, the attached batteries, and system availability. All of these factors contribute to the Relative Health Index (RHI) score that allows you to compare your unit's health relative to Eaton's optimum UPS operating levels.

### 8.2.2 Installing eNotify Service

A quick start guide and self-installation wizard tool are available on the Web at www.eaton.com/enotify/. For the latest updates, installation tips, and information on connecting eNotify, visit the eNotify Web page. For installation support or questions about the eNotify Service, contact www.eaton.com/enotify/.

The eNotify Service relies on a Power Xpert Gateway card installed with the UPS sending one-way status and event e-mails to Eaton Remote Monitoring servers that analyze and store the data. Those servers also take the appropriate actions of sending notifications and reports. The PXGX Connectivity Card gathers information from the UPS directly and from any external sensors that are attached. The card also records all events that are generated by the UPS. This data is stored within the non-volatile memory logs on the PXGX Connectivity Card.

The eNotify Service runs on common protocols and transport mechanisms, making the connectivity between the Power Xpert 9395 UPS and the Eaton Remote Monitoring servers easy to set up. By using common e-mail transport mechanism, you do not have to open your network to proprietary or potentially unsecure protocols and transports.

## 8.3 Power Management Software

Eaton's Intelligent Power® Software solution, based on Web-2.0 technology, includes two applications: Intelligent Power® Manager™ for UPS management and monitoring, and Intelligent Power® Protector™, which allows graceful shutdown of operating systems.

Eaton's Intelligent Power® Software gives you all the tools you need to monitor and manage power devices on your network, even in a virtualised environment. This innovative software solution combines the most critical applications in ensuring system uptime and data integrity: not only power monitoring and management, but also graceful shutdown during an extended power outage.

Because it can manage redundant power systems, it is an ideal solution for the most critical IT environments with stringent requirements for power availability and reliability. Yet it is easy to use – the software scales flexibly from a simple single-computer, single-UPS configuration, to the most sophisticated high-availability environments."

The software's mass configuration capabilities make installation and maintenance easy, which minimizes the effort required and benefits the bottom line. Eaton's cost-effective Intelligent Power Software manages up to ten devices at no charge, with licences for up to 100 devices – or even an unlimited number – also available.

Contact your Eaton Sales representative for additional information.

## 8.4 Building Alarm Monitoring

This standard feature lets you connect the UPS to your building alarms, such as smoke detectors or overtemperature alarms. The customer interface terminals for external connections are located inside the UPS. You should use twisted-pair wires for each alarm input and common.

The building alarms can be programmed to display the alarm functional name.

## 8.5 General Purpose Relay Contact

One general purpose relay contact is provided as a standard feature on the UPS. The alarm contact is located inside the UPS on the customer interface terminal board.

You can use a normally-closed or normally-open contact. If the state of the contact changes from the state you specify as normal, a signal is issued. You can connect this contact to equipment at your facility (such as a light or an alarm bell) to let you know when an alarm is active on the UPS. This feature is useful if the UPS is located in a remote area where the UPS horn may not be heard immediately.

**CAUTION**

Contacts should not be operated in excess of 30 Vac @ 5A maximum.

## 8.6 Remote Monitor Panel II

As an option, an RMP II can be installed to monitor the operation of the UPS system from virtually any location within the facility, up to 150m (500 ft) from the UPS. The RMP II contains backlit status indicators and a local horn. The RMP II can be flush-mounted or surface-mounted on a desktop, or secured to a wall. Figure 8-2 shows an RMP II.

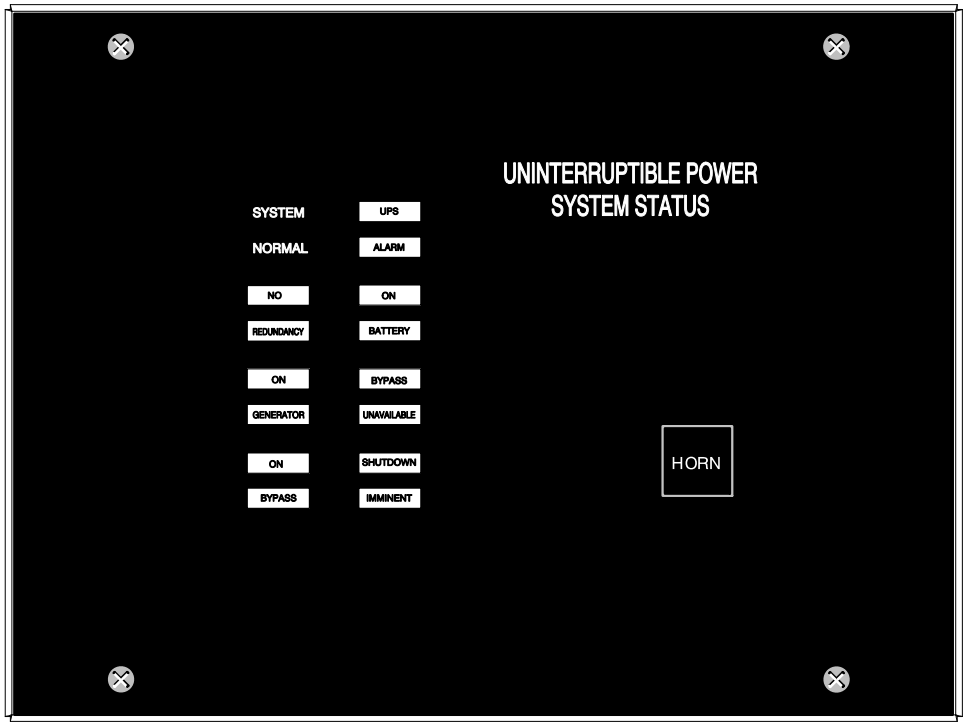


**Figure 8-2. Remote Monitor Panel II**

The RMP II contains a local horn and the backlit status indicators listed in Table 8-1.

**Table 8-1. RMP II Status Indicators**

**SYSTEM NORMAL**

The UPS is energized (either with utility power or battery backup) and is supplying conditioned power to the critical load.

**NO REDUNDANCY**

This indicator applies only to parallel systems when one cabinet is not functioning.

**ON GENERATOR**

The UPS input and bypass are being supplied by the power from the generator instead of from the utility power.

**ON BYPASS**

The bypass source is supplying the critical load. Usually this means that the UPS is not energized. The load is not protected in Bypass mode, and a horn sounds after 30 seconds.

**UPS ALARM**

The UPS system is issuing an alarm. Conditions that affect the current UPS mode are indicated by the indicators and horn on the UPS.

**ON BATTERY**

The UPS battery backup is supplying the critical load. The utility power is either interrupted or out of specification. The SYSTEM NORMAL indicator is also illuminated.

**BYPASS UNAVAILABLE**

The UPS system is in Online mode, but a bypass source is not within specification. A horn sounds after 30 seconds.

**SHUTDOWN IMMINENT**

The UPS is preparing to shut down because the UPS is in Battery mode and the DC voltage is approaching its low limit. This indicator is accompanied by a horn.

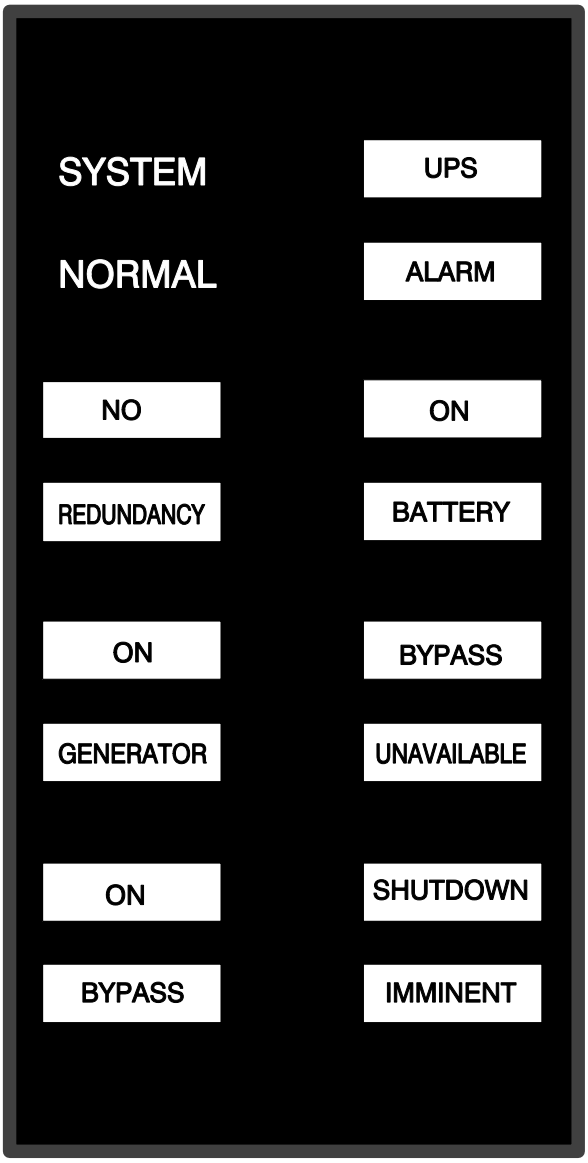

## 8.7 Relay Interface Module II

An optional RIM II uses relay contact closures to indicate the operating status and alarm condition of the UPS system. The module uses a serial interface line and may support up to eight critical loads. The RIM II can be flush-mounted or surface-mounted on a desktop, or secured to a wall. Figure 8-3 shows the RIM II with its four 15-pin connectors labeled J1 through J4.

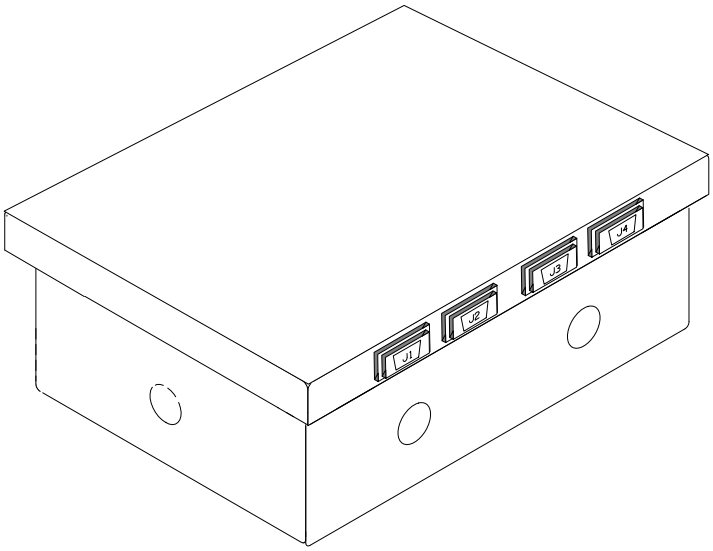


**Figure 8-3. Relay Interface Module II**

The RIM II can provide the status and alarm signals shown in Table 8-2.

**Table 8-2. Customer Interface Connectors**

| Status | J1 through J4 | Description |
|---|---|---|
| **UPS AVAILABLE** | Pins 1 and 12 | Contacts are closed when the UPS is operating in Online mode or ready to supply the load. |
| **UPS OFFLINE** | Pins 3 and 13 | Contacts are open when the UPS is offline.<br>Contacts are closed when the UPS is operating in Online mode. |
| **BATTERY WEAK** | Pins 5 and 14 | Contacts are closed when approximately two minutes of battery time is remaining before the critical load is lost. |
| **UTILITY FAILURE** | Pins 6 and 15 | Contacts are closed when Utility Failure is detected. |

## 8.8 Supervisory Contact Module II

An optional SCM II establishes an interface between the UPS system and the customer's monitor. This interface allows the customer to monitor operational status of the UPS system equipment. The SCM II can be flush-mounted or surface-mounted on a desktop, or secured to a wall. Figure 8-4 shows the SCM II.

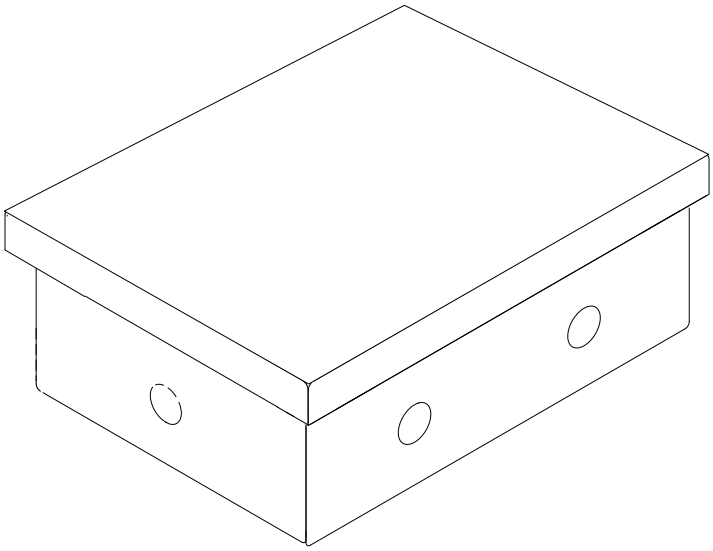

**Figure 8-4. Supervisory Contact Module II**

The SCM II provides signals for the indications shown in Table 8-3.

**Table 8-3. SCM II Status Indicators and Connections**

| Indication | TB2 Connections |
|---|---|
| **SYSTEM NORMAL** | TB2-1 through TB2-3 |
| **NO REDUNDANCY** | TB2-4 through TB2-6 |
| **ON GENERATOR** | TB2-7 through TB2-9 |
| **BYPASS NOT AVAILABLE** | TB2-10 through TB2-12 |
| **ON BATTERY** | TB2-13 through TB2-15 |
| **UPS ALARM** | TB2-16 through TB2-18 |
| **ON BYPASS** | TB2-19 through TB2-21 |
| **SHUTDOWN IMMINENT** | TB2-22 through TB2-24 |

This page intentionally left blank.

# Chapter 9 UPS Maintenance

The components inside the UPS cabinet are secured to a sturdy metal frame. All repairable parts and assemblies are located for easy removal, with very little disassembly. This design allows authorized service personnel to perform routine maintenance and servicing quickly.

You must schedule periodic performance checks of your UPS system to keep it running properly. Regular routine checks of operation and system parameters enable your system to function efficiently for many trouble-free years.

## 9.1 Important Safety Instructions

Remember that your UPS system is designed to supply power **EVEN WHEN DISCONNECTED FROM THE UTILITY POWER**. The UPS module interiors are unsafe until the DC power source is disconnected and the electrolytic capacitors are discharged. After disconnecting the utility power and the DC power, authorized service personnel should wait at least five minutes for capacitor bleedoff before attempting internal access to the UPS module.

**WARNING**

- Servicing and maintenance should be performed by qualified service personnel only.
- LETHAL VOLTAGE PRESENT. This unit should not be operated with the cabinet doors open or protective panels removed. Do not make any assumptions about the electrical state of any cabinet in the UPS system.

Because each battery string is an energy source in itself, opening the battery circuit breaker does not de-energize the voltage within the battery string. **DO NOT ATTEMPT TO ACCESS ANY INTERNAL AREA OF THE BATTERY STRING YOURSELF. VOLTAGES ARE ALWAYS PRESENT IN THE BATTERY STRING.** If you suspect that a battery string needs service, contact an Eaton service representative.

If the string requires service, refer to the battery manufacturer's operating manual for instructions on battery maintenance or contact an Eaton service representative.

Observe these precautions when working on or around batteries:

- Remove watches, rings, or other metal objects.
- Use tools with insulated handles.
- Wear rubber gloves and boots.
- Do not lay tools or metal parts on top of batteries or battery cabinets.
- Disconnect the charging source prior to connecting or disconnecting terminals.
- Determine if the battery is inadvertently grounded. If it is, remove the source of the ground. Contact with any part of a grounded battery can result in electrical shock. The likelihood of such shock is reduced if such grounds are removed during installation and maintenance.
- When replacing batteries, use the same number of sealed, lead-acid batteries.

- Proper disposal of batteries is required. Refer to your local codes for disposal requirements.
- Do not dispose of batteries in a fire. Batteries may explode when exposed to flame.
- Do not open or mutilate batteries. Released electrolyte is harmful to the skin and eyes. It may be toxic.

## 9.2 Performing Preventive Maintenance

The UPS system requires very little preventive maintenance. However, the system should be inspected periodically to verify that the units are operating normally and that the batteries are in good condition.

### 9.2.1 DAILY Maintenance

Perform the following steps daily:

1. Check the area surrounding the UPS system. Ensure the area is not cluttered, allowing free access to the unit.
2. Ensure the air intakes (vents on the front door and panel) and the exhaust opening (on top of the UPS cabinet) are not blocked.
3. Ensure the operating environment is within the parameters specified in paragraph 3.2.2 and Chapter 10, "Product Specifications."
4. Ensure the UPS is in Online mode (Online status indicator is illuminated). If an alarm lamp is illuminated or the Online status indicator is not illuminated, contact an Eaton service representative.

### 9.2.2 MONTHLY Maintenance

Perform the following steps monthly:

1. Monitor system parameters as described in paragraph 7.2, "Using the Control Panel".
2. Check the UPS air filters (located behind the front panels) and wash or replace as necessary. See Figure 9-1 for filter locations. The ISBM filter size is 12" × 20" × 0.25" and the UPM filter size is 20" × 44" × 0.25". Contact an Eaton service representative for replacement filters. To remove the filters:
   a. Remove one top screw and two bottom screws securing the UPM front panel (see Figure 4-1). Lift the panel straight up to remove it from the panel hanger bracket at the top of the cabinet.
   b. Remove one top screw and two bottom screws securing the ISBM left front panel (see Figure 4-2). Lift the panel straight up to remove it from the panel hanger bracket at the top of the cabinet.
   c. Pull the foam filters over the screw heads on the cabinet mounted studs and remove the filters from the cabinet.

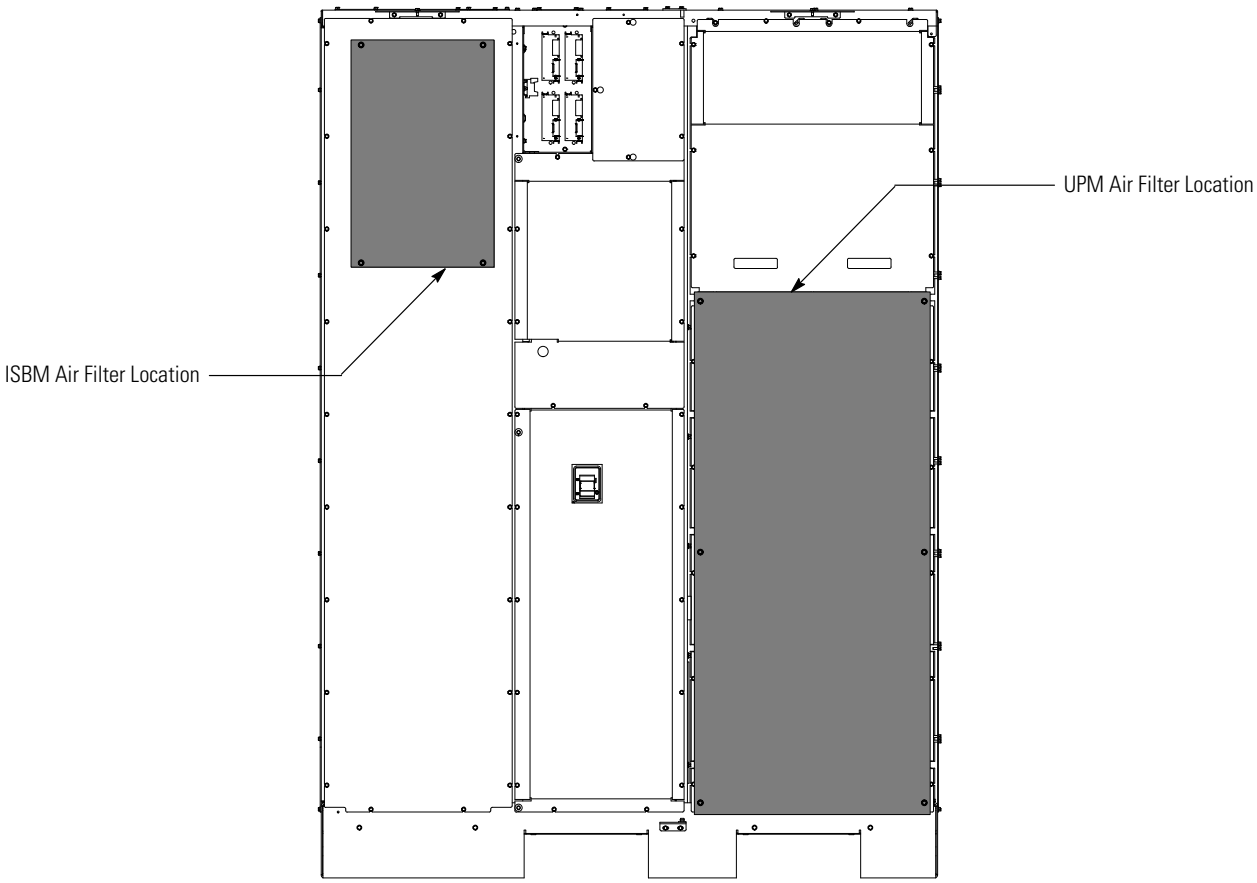


**Figure 9-1. UPS Filter Locations**

**CAUTION**

Verify washed filters are thoroughly dry before reinstalling.

**d.** Push the washed or new foam filters over the screw heads on the cabinet mounted studs until seated against the cabinet.

**e.** Reinstall the UPM front panel removed in Step a and secure with the retained hardware.

**f.** Reinstall the ISBM left front panel removed in Step b and secure with the retained hardware.

**3.** If the Field Installed UPM (FI-UPM) is installed, check the FI-UPM air filter (located behind the front panel) and wash or replace as necessary. See Figure 9-2 for the filter location. The FI-UPM filter size is 20″ × 44″ × 0.25″. Contact an Eaton service representative for a replacement filter. To remove the filter:

**a.** Remove one top screw and two bottom screws securing the FI-UPM front panel (refer to the *Power Xpert 9395 Field Installed UPM Mechanical Installation Manual*). Lift the panel straight up to remove it from the panel hanger bracket at the top of the cabinet.

**b.** Pull the foam filter over the screw heads on the cabinet mounted studs and remove the filter from the cabinet.

**CAUTION**

Verify washed filter is thoroughly dry before reinstalling.

**c.** Push the washed or new foam filter over the screw heads on the cabinet mounted studs until seated against the cabinet.

**d.** Reinstall the FI-UPM front panel removed in Step a and secure with the retained hardware.

**4.** Record maintenance results and any corrective actions in a suitable log.

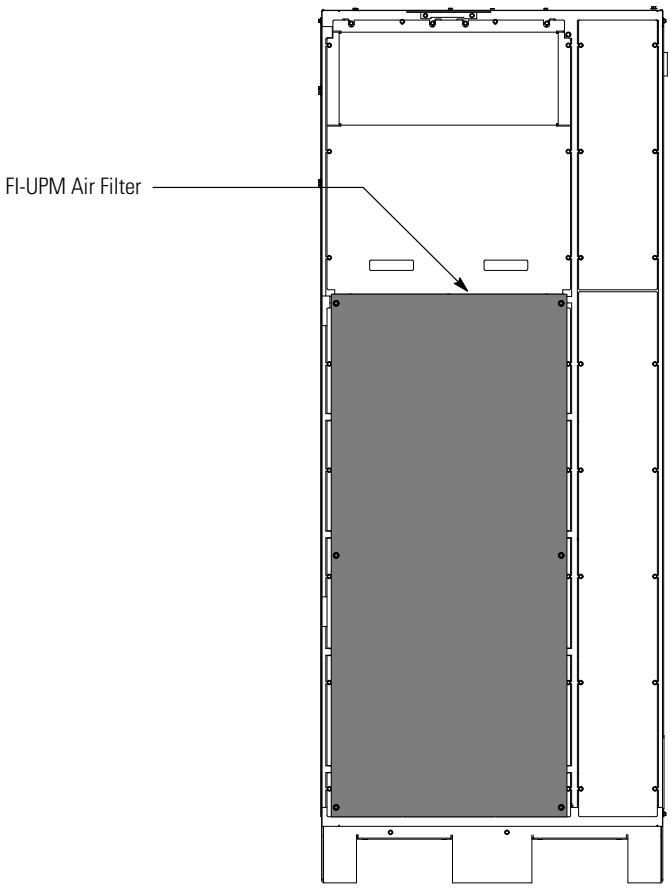


**Figure 9-2. FI-UPM Air Filter Location**

### 9.2.3 PERIODIC Maintenance

Periodic inspections of the UPS should be made to determine if components, wiring, and connections exhibit evidence of overheating. Particular attention should be given to bolted connections. Maintenance procedures should specify that the bolted connections be retorqued to values listed in this manual.

### 9.2.4 ANNUAL Maintenance

Annual preventive maintenance should be performed only by authorized service personnel familiar with maintenance and servicing of the UPS system. Contact an Eaton service representative for more information about service offerings.

### 9.2.5 BATTERY Maintenance

Contact an Eaton service representative for battery maintenance. Battery replacement and maintenance should be performed only by authorized service personnel.

## 9.3 Installing Batteries

***NOTE*** *There is no manual DC disconnect device within the UPS.*

Install batteries in accordance with the battery and battery cabinet or battery rack manufacturer's instructions.

## 9.4 Recycling the Used Battery or UPS

Contact your local recycling or hazardous waste center for information on proper disposal of the used battery or UPS.

**WARNING**

- Do not dispose of the battery or batteries in a fire. Batteries may explode. Proper disposal of batteries is required. Refer to your local codes for disposal requirements.
- Do not open or mutilate the battery or batteries. Released electrolyte is harmful to the skin and eyes. It may be toxic.
- A battery can cause electrical shock, burn from high short-circuit current, or fire. Observe proper precautions.

**ATTENTION!**

- Une batterie peut prêsenter un risque de choc êlectrique, de brulure, ou d'incendie. Suivre les précautions qui s'imposent.
- Pour le remplacement, utiliser le même nombre et modéle des batteries.
- L'élimination des batteries est règlementée. Consulter les codes locaux à cet effet.

**CAUTION**

Do not discard the UPS or the UPS batteries in the trash. This product contains sealed, lead-acid batteries and must be disposed of properly. For more information, contact your local recycling/reuse or hazardous waste center.

**CAUTION**

Do not discard waste electrical or electronic equipment (WEEE) in the trash. For proper disposal, contact your local recycling/reuse or hazardous waste center.

## 9.5 Maintenance Training

A basic training course, available from Eaton Corporation, gives you a competent working knowledge of the UPS system operation and teaches you how to perform first level corrective maintenance. For more information about training and other services, contact the Help Desk (see page -10).

This page intentionally left blank.

# Chapter 10 Product Specifications

## 10.1 Model Numbers

The UPS is housed in a free-standing cabinet with safety shields behind the door and front panels. The UPS is available in 50 or 60 Hz with various output power ratings.

| Models | Power Rating | Frequency |
|---|---|---|
| Power Xpert 9295-250/228 | 228 kVA | 50/60 Hz |
| Power Xpert 9395-275/225 | 225 kVA | 50/60 Hz |
| Power Xpert 9395-275/275 | 275 kVA | 50/60 Hz |

## 10.2 Specifications

The following sections detail the input, output, battery, and environmental specifications for the UPS.

### 10.2.1 UPS Input

| | |
|---|---|
| **Operating Input Voltage** | 400 Vac<br>480 Vac |
| **Operating Input Frequency Range** | 50 or 60 Hz |
| **Operating Input Current** | See Table 3-4, Table 3-5, or Table 3-6 .<br><br>Reduced for Generator<br>Adjustable |
| **Input Current Harmonic Content** | 5% THD at full load |
| **Power Factor** | Minimum 0.99 |
| **Line Surges** | 6 kV OC, 3 kA SC per ANSI 62.41 and IEC 801-4 |
| **Battery Voltage** | 480 Vdc |
| **Battery Charging Capacity** | Configurable per UPM at nominal line voltage:<br>Up to 120A with less than 85% load<br>Up to 80A with 100% load |
| **Battery Shunt Trip** | 48 Vdc |

### 10.2.2 UPS Output

| | |
|---|---|
| **UPS Output Capacity** | 100% rated current |
| **Output Voltage Regulation** | ±1% (10% to 100% load) |
| **Output Voltage Adjustment (Nominal +/–3%)** | 400 Vac nominal, adjustable from 388 Vac to 412 Vac<br>480 Vac nominal, adjustable from 466 Vac to 494 Vac |
| **Output Voltage Harmonic Content** | 1.5% maximum THD (linear load)<br>5% maximum THD (nonlinear load) |
| **Output Current** | See Table 3-4 or Table 3-5. |
| **Output Voltage Balance** | 3% for 100% maximum load imbalance (linear load) |
| **Output Voltage Phase Displacement** | 3° for 100% maximum load imbalance (linear load) |
| **Output Transients** | ±5% (10% to 100% load) |
| **Frequency Regulation** | ±0.1 Hz free running |
| **Synchronous to Bypass** | +10% to -10% ±3% |
| **Frequency Slew Rate** | 1 Hz per second maximum |
| **Load Compatibility** | 0.9 pF Leading<br>0.8 pF Lagging |
| **Overload Capability** | 110% for 10 minutes<br>125% for 30 seconds<br>150% for 10 seconds |

NOTE The 110% overload capability in the above table is based on the kVA label rating of the UPS.
The 125% and 150% overloads are based on the non-derated hardware capability of the UPS.

### 10.2.3 UPS Environmental

| | |
|---|---|
| **Operating Temperature** | 0 to 40°C (32 to 104°F) without derating. The recommended operating temperature is 25°C (77°F). |
| **Operating Altitude** | Maximum 1500m (5000 ft) at 40°C without derating |
| **Storage Temperature** | –25 to +60°C, excluding batteries (prolonged storage above 40°C causes rapid battery self-discharge) |
| **Relative Humidity (Operating and Storage)** | 5% to 95% maximum noncondensing |
| **Acoustical Noise** | 76 dB at a 1m distance, A weighted |
| **EMI Suppression** | Meets FCC Regulation 47, Part 15, for class A devices |
| **Electrostatic Discharge (ESD) Immunity** | Meets IEC 801-2 specifications. Withstands up to 25 kV pulse without damage and with no disturbance or adverse effect to the critical load. |

# Warranty

## LIMITED FACTORY WARRANTY FOR EATON THREE-PHASE UPS PRODUCTS

WARRANTOR: The warrantor for the limited warranties set forth herein is Eaton Corporation, an Ohio Corporation ("Eaton").

LIMITED WARRANTY: This limited warranty (this "Warranty") applies only to the original end-user (the "End-User") of the Eaton Three-Phase UPS Products (the "Product") and cannot be transferred. This Warranty applies even in the event that the Product is initially sold by Eaton for resale to an End-User.

LIMITED WARRANTY PERIOD: The period covered by this Warranty for Product installed [and currently located] in the fifty (50) United States and the District of Columbia is twelve (12) months from the date of Product start-up or eighteen (18) months from the date of Product shipment, whichever occurs first, for parts coverage and 90 days from the date of Product start-up for labor coverage. The period covered by this Warranty for Product installed [and currently located] outside of the fifty (50) United States and the District of Columbia is twelve (12) months from the date of Product start-up or eighteen (18) months from the date of Product shipment, whichever occurs first, for parts coverage.

WHAT THIS LIMITED WARRANTY COVERS: The warrantor warrants that the Eaton three-phase UPS electronics, Eaton-built accessories, and Eaton-built battery cabinets (individually and collectively, the "Warranted Items") are free from defects in material and workmanship. If, in the opinion of Eaton, a Warranted Item is defective and the defect is within the terms of this Warranty, Eaton's sole obligation will be to repair or replace such defective item (including by providing service, parts, and labor, as applicable), at the option of Eaton. The Warranted Item will be repaired or replaced onsite at the End-User's location or such other location as determined by Eaton. Any parts that are replaced may be new or reconditioned. All parts replaced by Eaton shall become the property of Eaton.

WHAT THIS LIMITED WARRANTY DOES NOT COVER: This Warranty does not cover any defects or damages caused by: (a) failure to properly store the Product before installation, including the "trickle charge" of batteries no later than the date indicated on the packaging; (b) shipping and delivery of the Product if shipping is FOB Factory; (c) neglect, accident, fire, flood, lightning, vandalism, acts of God, Customer's neglect, abuse, misuse, misapplication, incorrect installation; (d) repair or alteration not authorized in writing by Eaton personnel or performed by an authorized Eaton Customer Service Engineer or Agent; or (e) improper testing, operation, maintenance, adjustment, or any modification of any kind not authorized in writing by Eaton personnel or performed by an authorized Eaton Customer Service Engineer or Agent.

This Warranty is not valid: (a) unless an authorized Eaton Customer Service Engineer (in the USA) or Agent (outside of the USA) performs startup and commissioning of the Product; (b) if the Product is moved to a new location by someone other than an authorized Eaton Customer Service Engineer (in the USA) or Agent (outside of the USA); or (c) if the Product's serial numbers have been removed or are illegible. Any Warranted Items repaired or replaced pursuant to this Warranty will be warranted for the remaining portion of the original Warranty subject to all the terms thereof. Labor warranty is not provided for Product located outside of the fifty (50) United States or the District of Columbia. Any equipment, parts, or materials included in the Product and not manufactured by Eaton are warranted solely by the manufacturer of such equipment, parts, or materials and are not included as part of this Warranty. Batteries are not warranted by Eaton.

THIS WARRANTY IS THE END-USER'S SOLE REMEDY AND IS EXPRESSLY IN LIEU OF, AND THERE ARE NO OTHER EXPRESSED OR IMPLIED GUARANTEES OR WARRANTIES (INCLUDING ANY IMPLIED WARRANTY OF MERCHANTABILITY OR FITNESS FOR ANY PURPOSE, WHICH ARE EXPRESSLY DISCLAIMED).

LIMITATION OF LIABILITY: In no event shall Eaton be liable for any indirect, incidental, special, or consequential damages of any kind or type whatsoever, or based on any claim or cause of action, however denominated. Eaton shall not be responsible for failure to provide service or parts due to causes beyond Eaton's reasonable control. In no case will Eaton's liability under this Warranty exceed the replacement value of the Warranted Items.

END-USER'S OBLIGATIONS: In order to receive the benefits of this Warranty, the End-User must use the Product in a normal way, follow the Product's installation, operation and maintenance manual, and protect against further damage to the Product if there is a covered defect.

OTHER LIMITATIONS: Eaton's obligations under this Warranty are expressly conditioned upon receipt by Eaton of all payments due to it (including interest charges, if any). During such time as Eaton has not received payment of any amount due to it for the Product, in accordance with the contract terms under which the Product is sold, Eaton shall have no obligation under this Warranty. Also during such time, the period of this Warranty shall continue to run and the expiration of this Warranty shall not be extended upon payment of any overdue or unpaid amounts.

COSTS NOT RELATED TO WARRANTY: The End-User shall be invoiced for, and shall pay for, all services not expressly provided for by the terms of this Warranty, including without limitation site calls involving an inspection that determines no corrective maintenance is required. Any costs for replacement equipment, installation, materials, freight charges, travel expenses, or labor of Eaton representatives outside the terms of this Warranty will be borne by the End-User.

OBTAINING WARRANTY SERVICE: In the USA, call the Eaton Customer Reliability Center 7x24 at 800-843-9433. Outside of the USA, call your local Eaton sales or service representative, or call the Eaton Customer Reliability Center in the USA at 919-870-3028. For comments or questions about this Limited Factory Warranty, write to the Customer Quality Representative, 3301 Spring Forest Road, Raleigh, North Carolina 27616 USA.

This page intentionally left blank.

164201683 8